171506107/P9 10/2022

T* - TC* - TH* **92 Series**
102 Series
108 Series
118 Series
122 Series

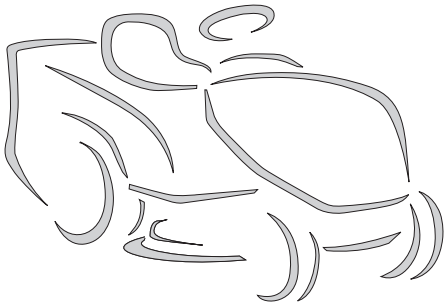

IT **Tosaerba con conducente a bordo seduto** - MANUALE DI ISTRUZIONI
ATTENZIONE: prima di usare la macchina, leggere attentamente il presente libretto.

BG **Косачка със седнал водач** - УПЪТВАНЕ ЗА УПОТРЕБА
ВНИМАНИЕ: преди да използвате машината прочетете внимателно настоящата книжка.

BS **Traktorska kosilica (traktorčić)** - UPUTSTVO ZA UPOTREBU
PAŽNJA: prije nego što koristite ovu mašinu, pažljivo pročitajte priručnik s uputama.

CS **Sekačka se sedící obsluhou** - NÁVOD K POUŽITÍ
UPOZORNĚNÍ: před použitím stroje si pozorně přečtěte tento návod k použití.

DA **Havetraktor** - BRUGSANVISNING
ADVARSEL: læs instruktionsbogen omhyggeligt igennem, før du tager denne maskine i brug.

DE **Aufsitzmäher (Rasenmäher mit Fahrersitz mit sitzendem Benutzer)** GEBRAUCHSANWEISUNG
ACHTUNG: vor inbetriebnahme des Geräts die Gebrauchsanleitung aufmerksam lesen.

EL **Χλοοκοπτικό τρακτέρ με εποχούμενο χειριστή** - ΟΔΗΓΙΕΣ ΧΡΗΣΠΣ
ΠΡΟΣΟΧΗ: πριν χρησιμοποιησετε το μηχανημα, διαβαστε προσεκτικα το παρον εγχειριδιο.

EN **Ride-on lawnmower with seated operator** - OPERATOR'S MANUAL
WARNING: read thoroughly the instruction booklet before using the machine.

ES **Cortadora de pasto con conductor sentado** MANUAL DE INSTRUCCIONES
ATENCIÓN: antes de utilizar la máquina, leer atentamente el presente manual.

ET **Istuva juhiga muruniitja** - KASUTUSJUHEND
TÄHELEPANU: enne masina kasutamist lugeda tähelepanelikult antud kasutusjuhendit.

FI **Päältäajettava ruohonleikkuri** - KÄYTTÖOHJEET
VAROITUS: lue käyttöopas huolellisesti ennen koneen käyttöä.

FR **Tondeuse à gazon à conducteur assis** - MANUEL D'UTILISATION
ATTENTION: lire attentivement le manuel avant d'utiliser cette machine.

HR **Sjedeća kosilica trave s operaterom** - PRIRUČNIK ZA UPORABO
POZOR: prije uporabe stroja, pažljivo pročitajte ovaj priručnik.

HU **Vezetőüléses fűnyírógép** - HASZNÁLATI UTASÍTÁS
FIGYELEM! a gép használata előtt olvassa el figyelmesen a jelen kézikönyvet.

LT **Balninė vejapjovė su sėdinčiu operatoriumi**
NAUDOJIMO INSTRUKCIJOS

DĖMESIO: prieš naudojant įrenginį, atidžiai perskaityti šį naudotojo vadovą.

LV **Sēžot vadāma zālienu pļaujmašīna** - LIETOŠANAS INSTRUKCIJA

UZMANĪBU: pirms aparāta lietošanai rūpīgi izlasiet doto instrukciju.

MK **Тревокосачка со седнат управувач** - УПАТСТВА ЗА УПОТРЕБА

ВНИМАНИЕ: прочитајте го внимателно ова упатство пред да ја користите машината.

NL **Grasmaaier met zittende bediener** - GEBRUIKERSHANDLEIDING

LET OP: vooraleer de machine te gebruiken, dient men deze handleiding aandachtig te lezen.

NO **Sittegressklipper** - INSTRUKSJONSBOK

ADVARSEL: les denne bruksanvisningen nøye før du bruker maskinen.

PL **Kosiarka z operatorem jadącym, w pozycji siedzącej na maszynie**
INSTRUKCJE OBSŁUGI

OSTRZEŻENIE: przed użyciem maszyny, należy uważnie przeczytać niniejszą instrukcję.

PT **Corta-relvas para operador sentado** - MANUAL DE INSTRUÇÕES

ATENÇÃO: antes de usar a máquina, leia atentamente o presente manual.

RO **Mașină de tuns iarba cu șofer la volan** - MANUAL DE INSTRUCȚIUNI

ATENȚIE: înainte de a utiliza mașina, citiți cu atenție manualul de față.

RU **Ездовая косилка с сиденьем** - РУКОВОДСТВО ПО КСПЛУАТАЦИИ

ВНИМАНИЕ: прежде чем пользоваться оборудованием, внимательно прочтите зто руководство по зксплуатации.

SK **Kosačka so sediacou obsluhou** - NÁVOD NA POUŽITIE

UPOZORNENIE: pred použitím stroja si pozorne prečítajte tento návod.

SL **Traktorska kosilnica** - PRIROČNIK ZA UPORABO

POZOR: preden uporabite stroj, pazljivo preberite priročnik z navodili.

SR **Traktorska kosačica (traktorčić)** - PRIRUČNIK SA UPUTSTVIMA

PAŽNJA: pre korišćenja mašine pažljivo pročitati ovaj priručnik.

SV **Åkgräsklippare och främre klippning** - BRUKSANVISNING

VARNING: läs igenom hela detta häfte innan du använder maskinen.

TR **Oturan sürücülü çim biçme makinesi - KULLANIM KILAVUZU**

DİKKAT: makıneyı kullanmadan önce talımatlar ıçeren kilavuzu dıkkatle okuyun.

ITALIANO - **Istruzioni Originali** ..... IT
БЪЛГАРСКИ - Инструкция за експлоатация ..... BG
BOSANSKI - Prijevod originalnih uputa ..... BS
ČESKY - Překlad původního návodu k používání ..... CS
DANSK - Oversættelse af den originale brugsanvisning ..... DA
DEUTSCH - Übersetzung der Originalbetriebsanleitung ..... DE
ΕΛΛΗΝΙΚΑ - Μεταφραση των πρωτοτυπων οδηγιων ..... EL
ENGLISH - Translation of the original instruction ..... EN
ESPAÑOL - Traducción del Manual Original ..... ES
EESTI - Algupärase kasutusjuhendi tõlge ..... ET
SUOMI - Alkuperäisten ohjeiden käännös ..... FI
FRANÇAIS - Traduction de la notice originale ..... FR
HRVATSKI - Prijevod originalnih uputa ..... HR
MAGYAR - Eredeti használati utasítás fordítása ..... HU
LIETUVIŠKAI - Originalių instrukcijų vertimas ..... LT
LATVIEŠU - Instrukciju tulkojums no oriģināl valodas LV
МАКЕДОНСКИ - Превод на оригиналните упатства ..... MK
NEDERLANDS - Vertaling van de oorspronkelijke gebruiksaanwijzing ..... NL
NORSK - Oversettelse av den originale bruksanvisningen ..... NO
POLSKI - Tłumaczenie instrukcji oryginalnej ..... PL
PORTUGUÊS - Tradução do manual original ..... PT
ROMÂN - Traducerea manualului fabricantului ..... RO
РУССКИЙ - Перевод оригинальных инструкций ..... RU
SLOVENSKY - Preklad pôvodného návodu na použitie ..... SK
SLOVENŠČINA - Prevod izvirnih navodil ..... SL
SRPSKI - Prevod originalnih uputstva ..... SR
SVENSKA - Översättning av bruksanvisning i original ..... SV
TÜRKCE - Oriiinal Talimatların Tercümesi ..... TR

1

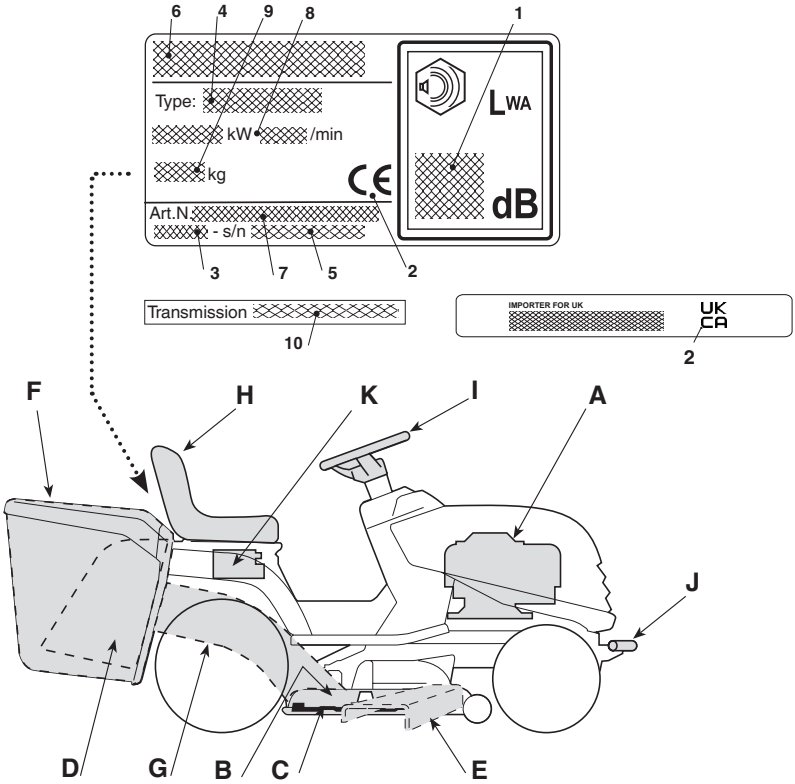
6
4
9
8
1
Type:
kW
/min
kg
LWA
dB
Art.N.
- s/n
3
7
5
2
Transmission
10
IMPORTER FOR UK
UK
CA
2
F
H
K
I
A
J
D
G
B
C
E

2

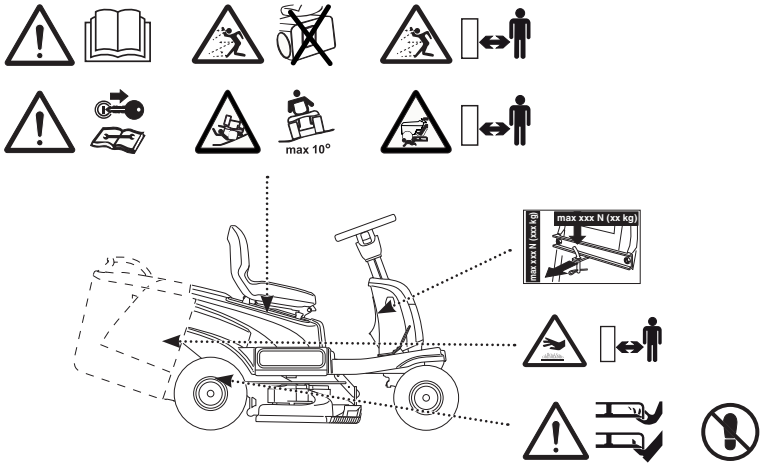
max 10°
max xxx N (xx kg)
max xxx N (xx kg)

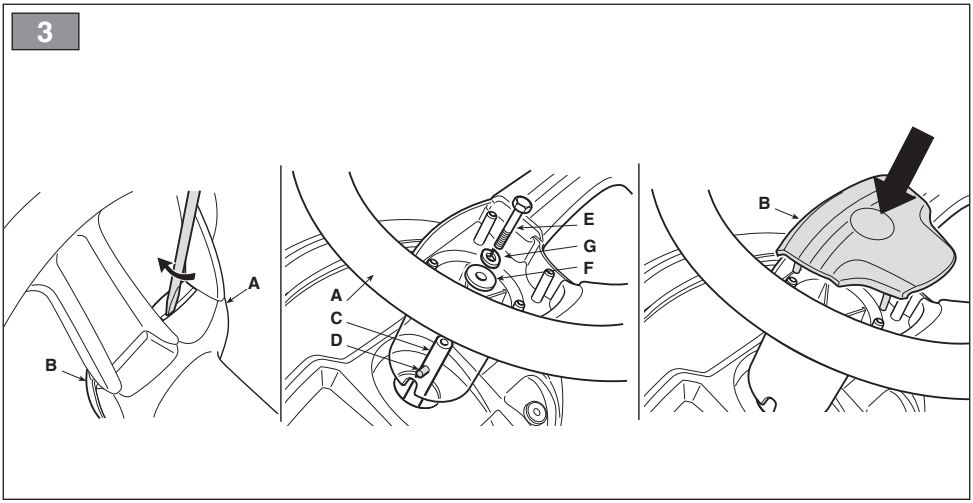
3
A
B
A
C
D
E
G
F
B

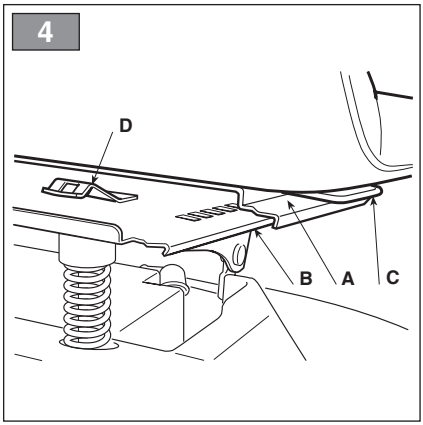
4
D
B
A
C

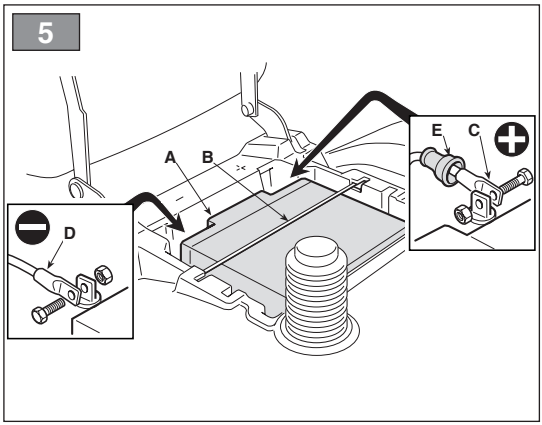
5
A
B
D
E
C

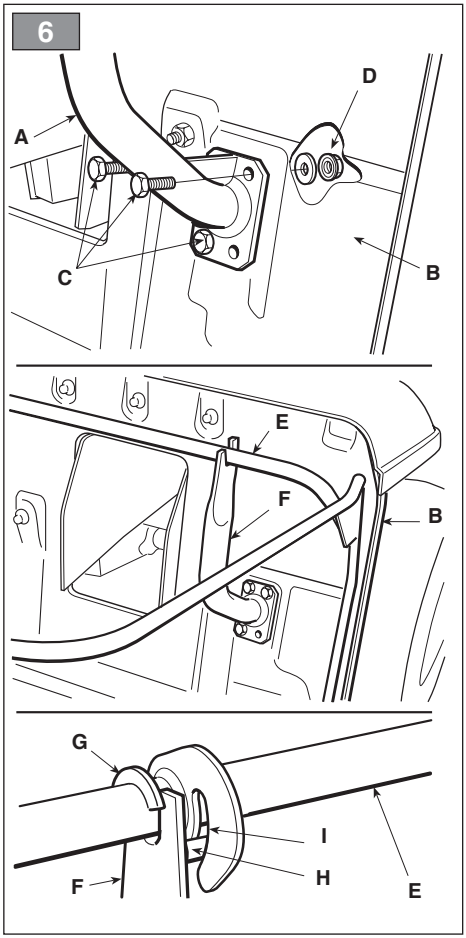
6
A
D
C
B
E
F
B
G
I
H
F
E

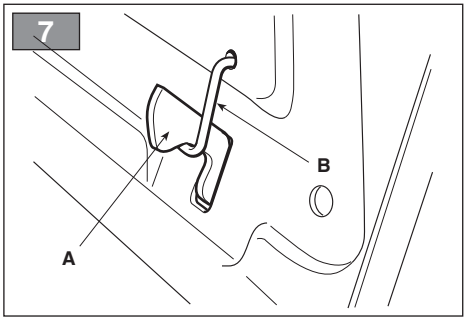
7
B
A

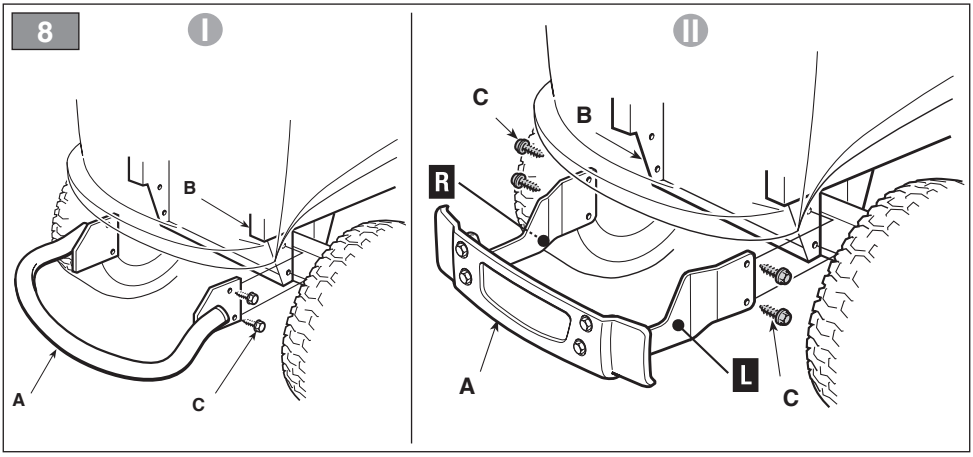
8
I
B
A
C
II
C
B
R
A
L
C

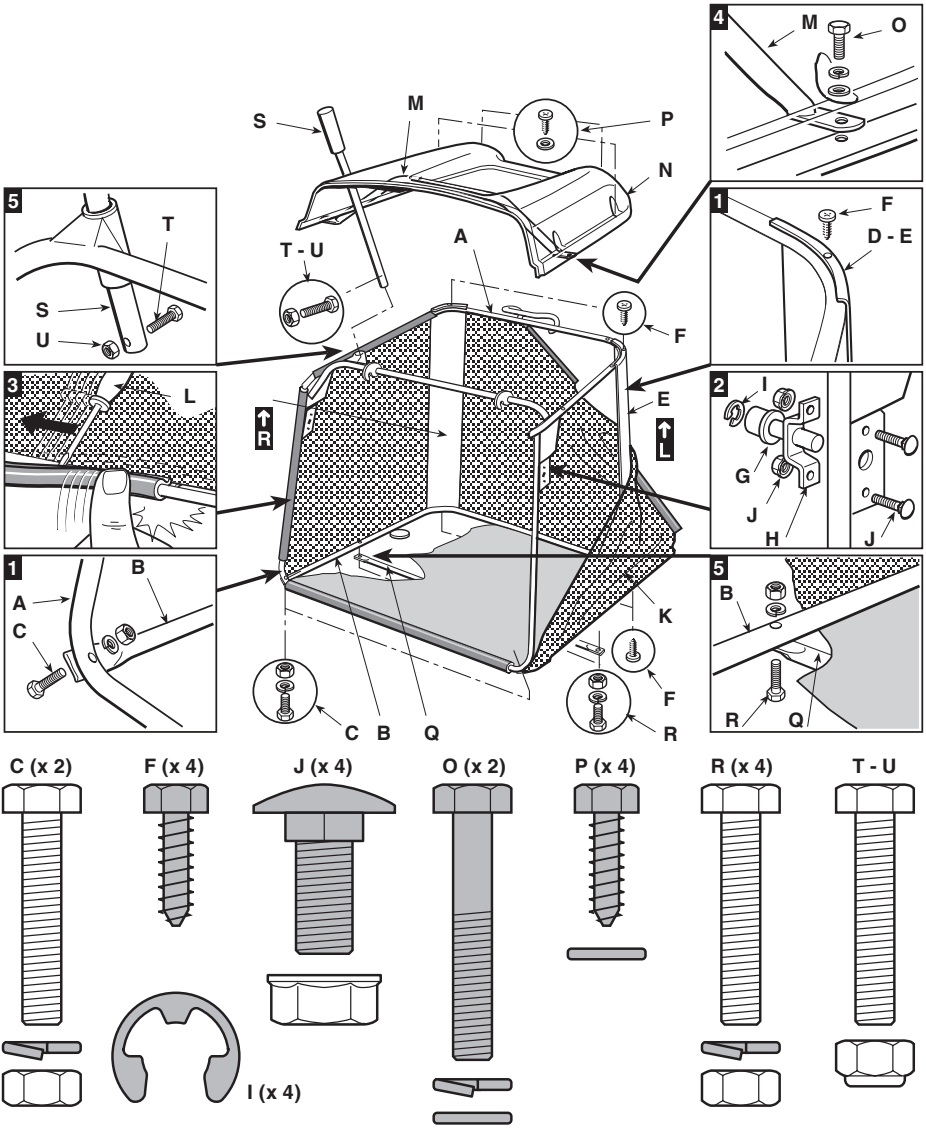
4
M
O
S
M
P
N
5
T
T - U
A
1
F
D - E
S
U
F
3
L
R
E
L
2
I
G
J
H
J
1
B
A
C
5
B
K
F
R
C
B
Q
R
Q
C (x 2)
F (x 4)
J (x 4)
O (x 2)
P (x 4)
R (x 4)
T - U
I (x 4)

10

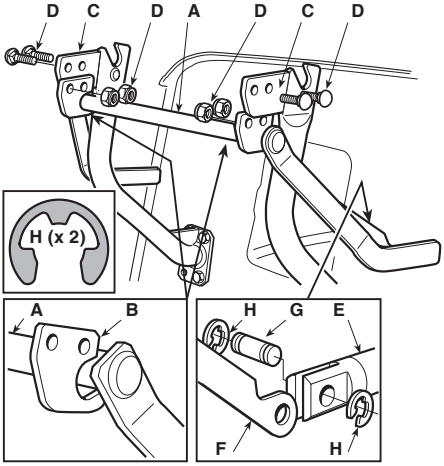
D
C
D
A
D
C
D
H (x 2)
A
B
H
G
E
F
H

11

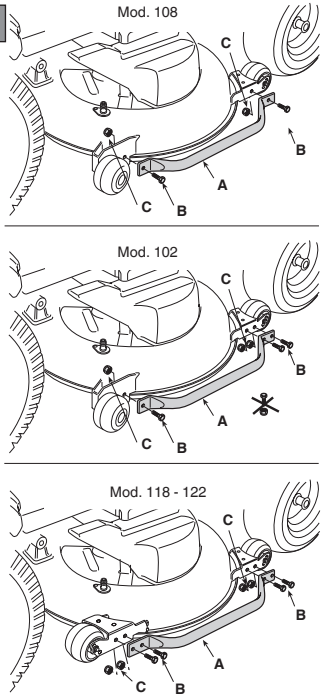
Mod. 108
C
B
A
C
B
Mod. 102
C
B
A
C
B
Mod. 118 - 122
C
B
A
C
B

12

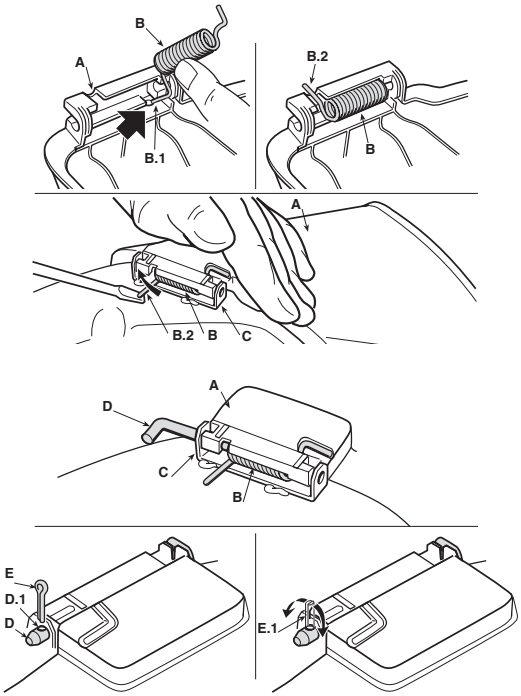
B
A
B.1
B.2
B
A
B.2
B
C
A
D
C
B
E
D.1
D
E.1

13

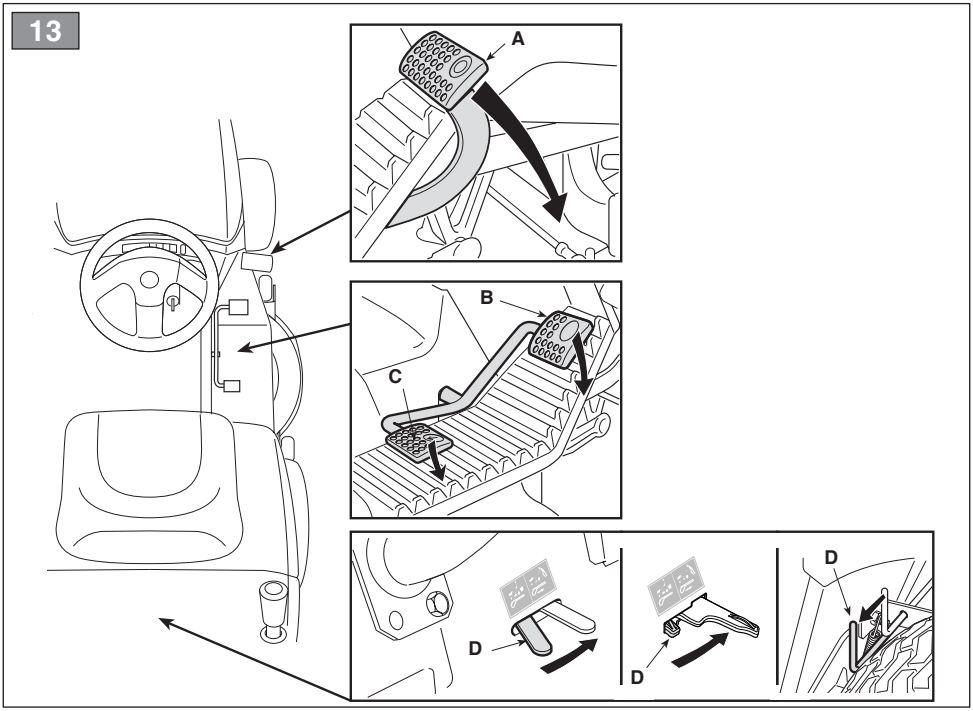

14

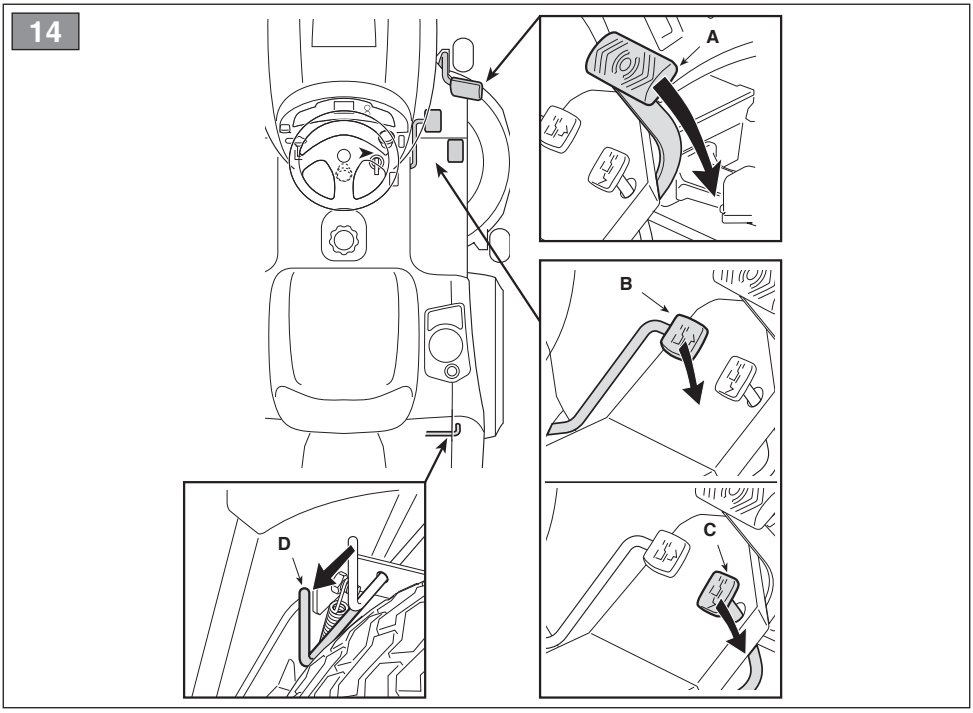

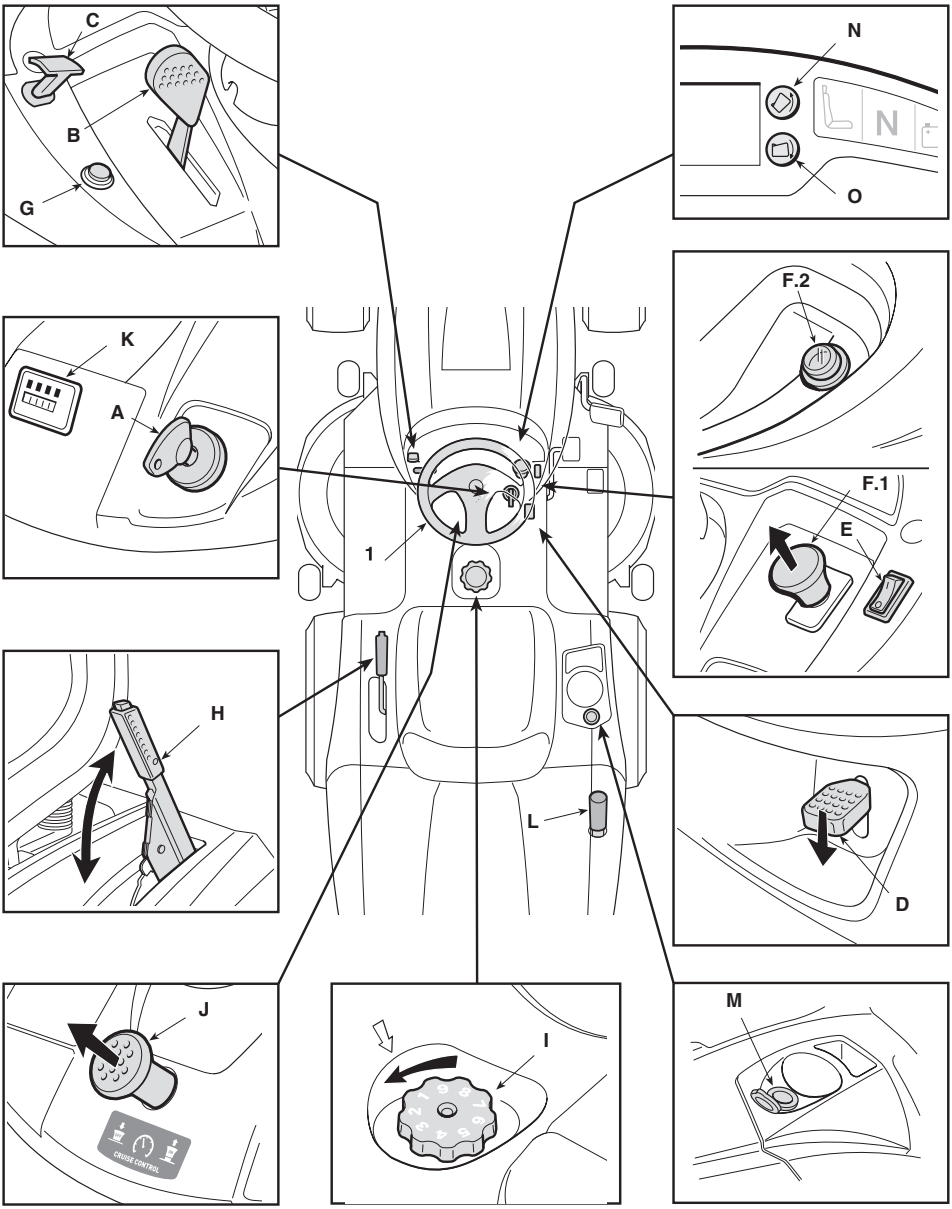
C
B
G
N
N
O
K
A
F.2
F.1
E
1
H
L
D
J
CRUISE CONTROL
I
M

16

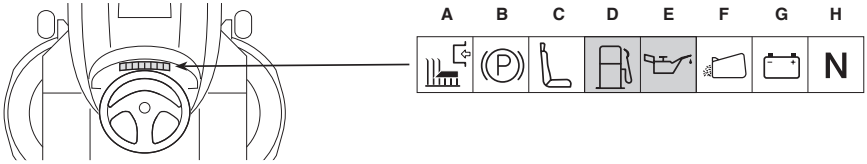
I
A B C D E F G H
N

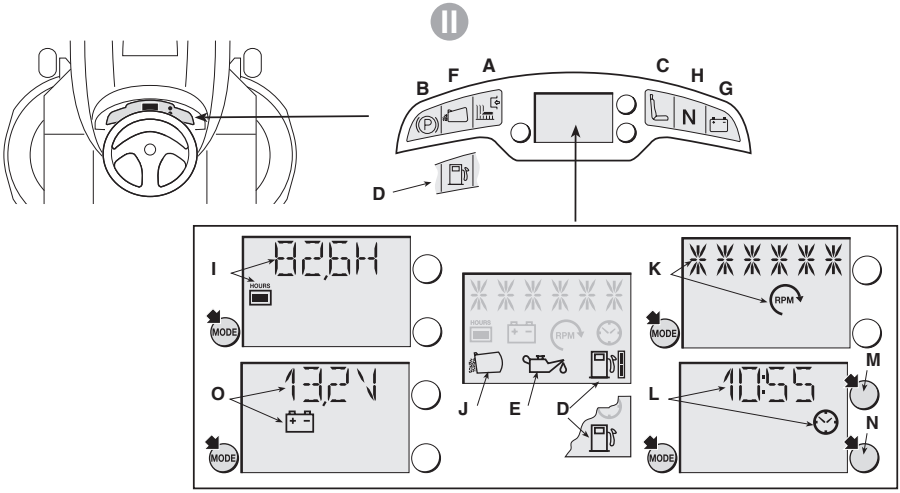
II
B F A C H G
N
D
I
82,6H
HOURS
MODE
O
13,2V
MODE
J E D
K
RPM
MODE
L
10:55
M
N
MODE

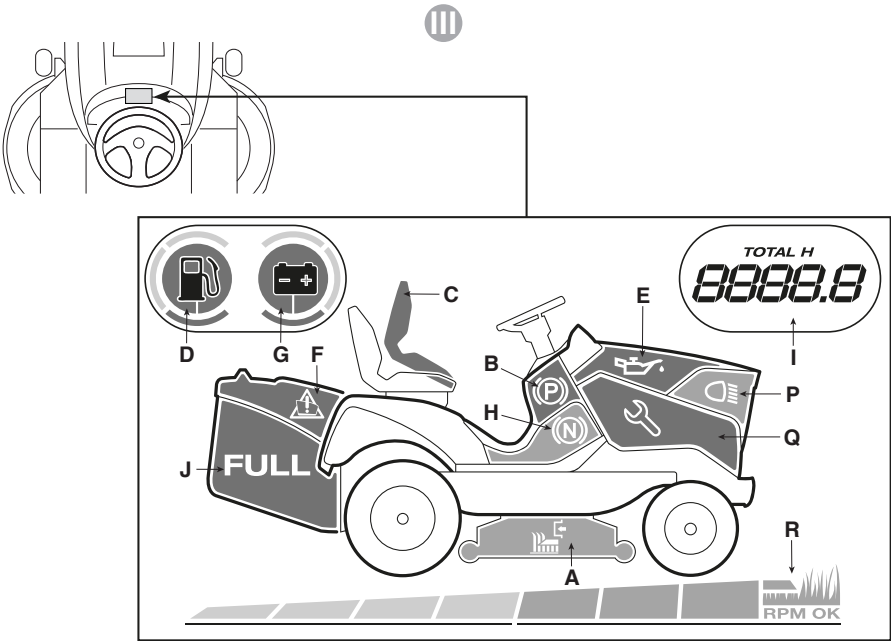
III
TOTAL H
8888.8
C
E
D G F
B
I
P
H
Q
J
FULL
R
A
RPM OK

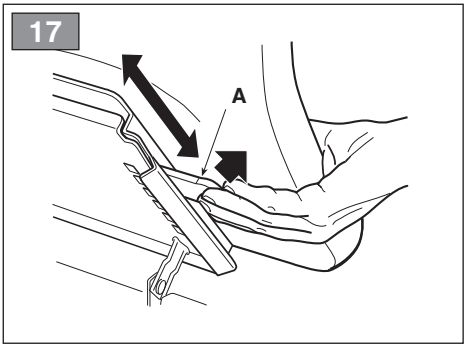
17
A

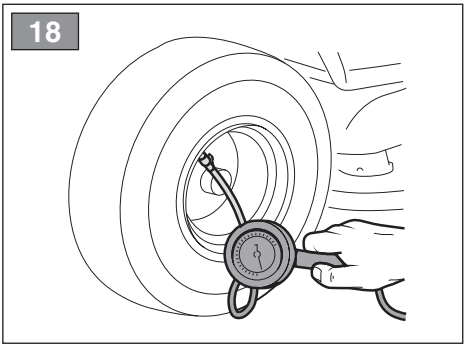
18

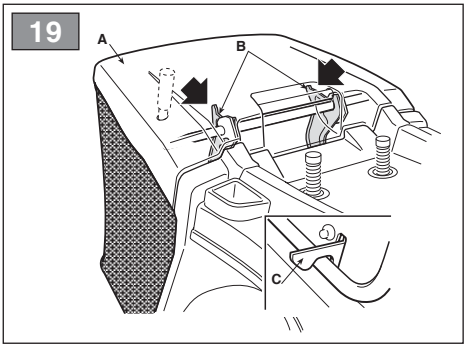
19
A
B
C

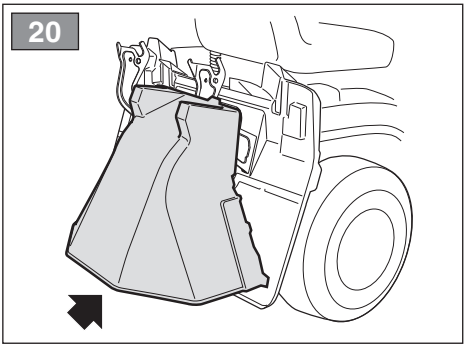
20

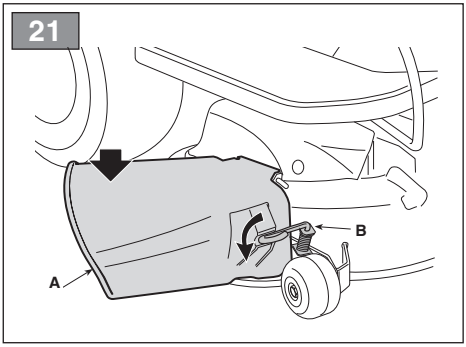
21
B
A

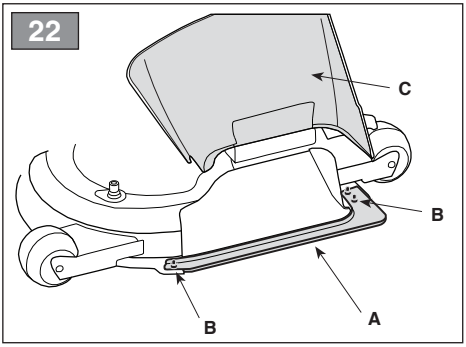
22
C
B
B
A

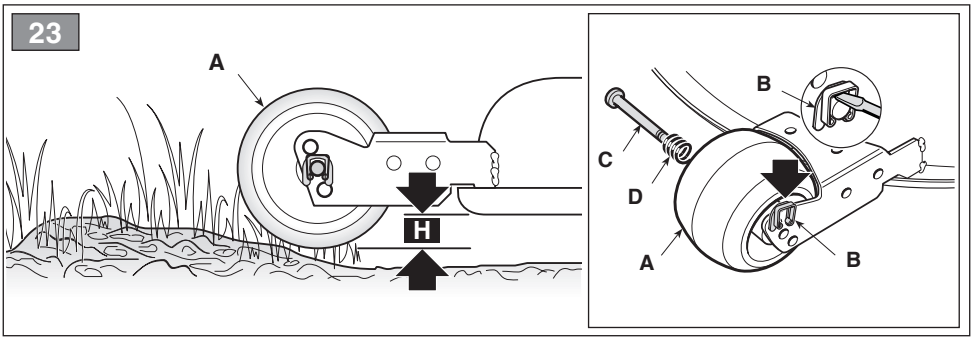
23
A
H
B
C
D
A
B

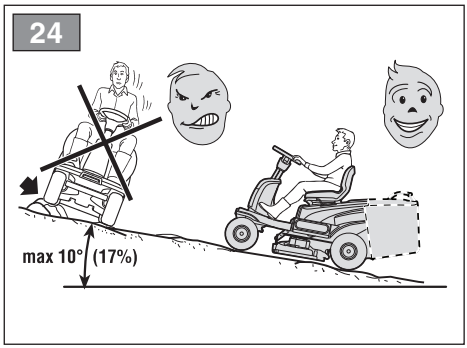
24
max 10° (17%)

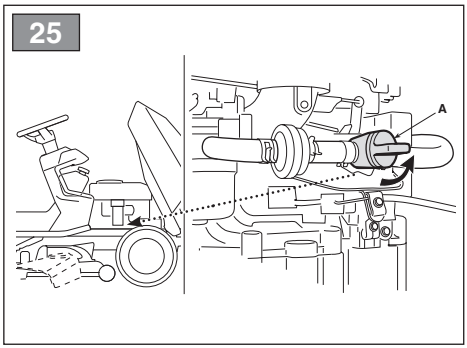
25
A

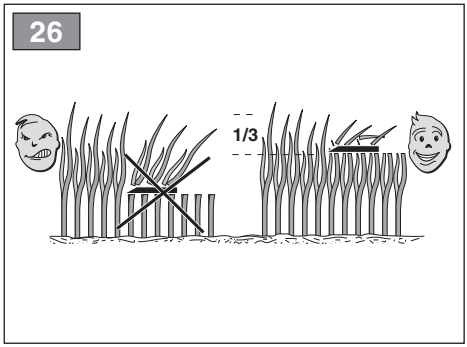
26
1/3

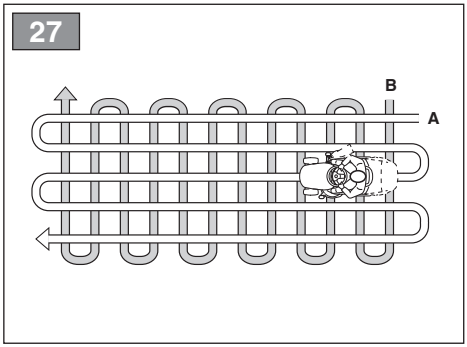
27
B
A

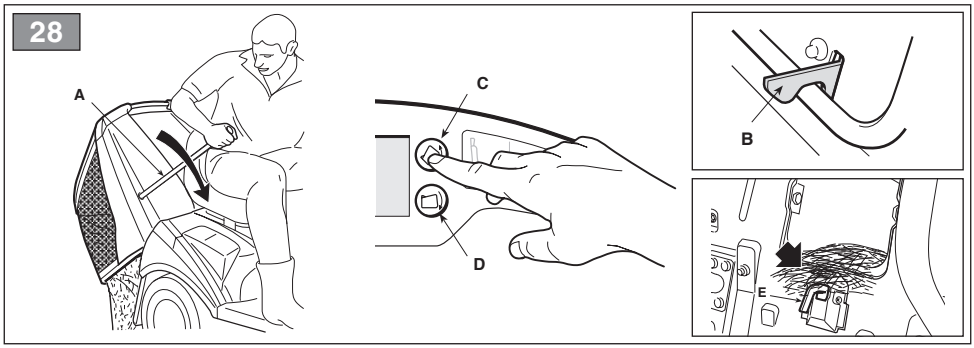
28
A
C
D
B
E

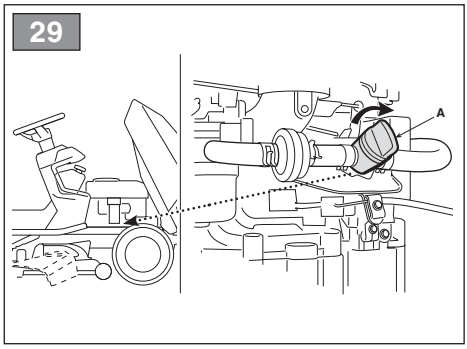
29
A

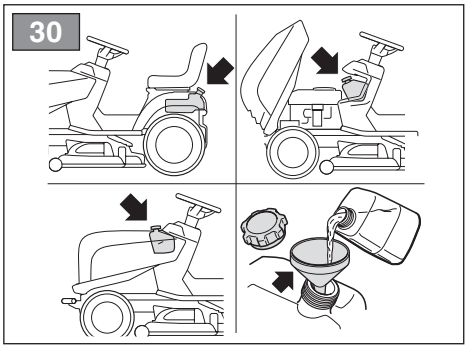
30

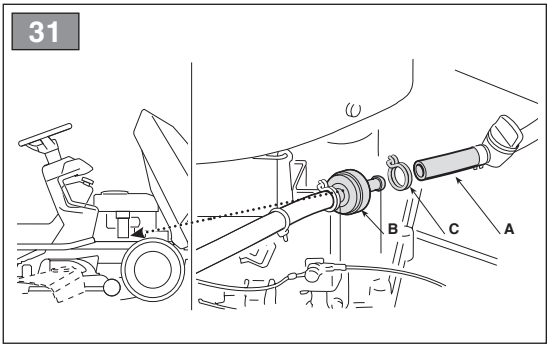
31
B
C
A

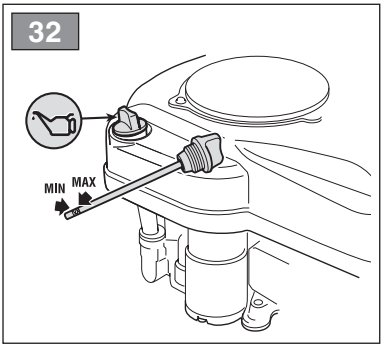
32
MIN
MAX

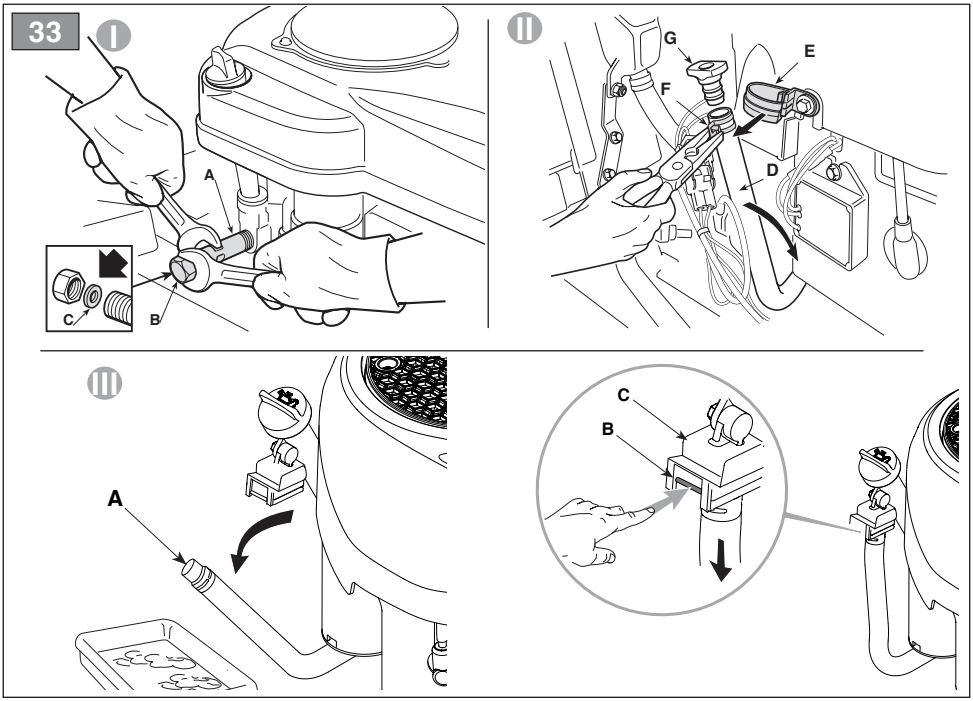
33
I
A
B
C
II
G
E
F
D
III
A
C
B

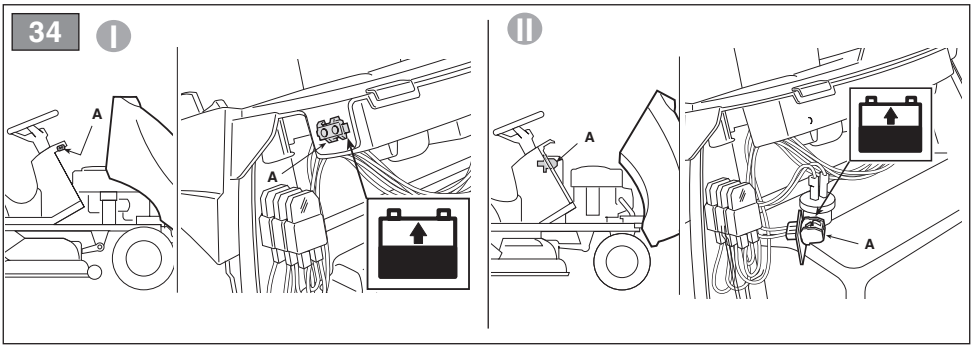
34
I
A
A
II
A
A

35

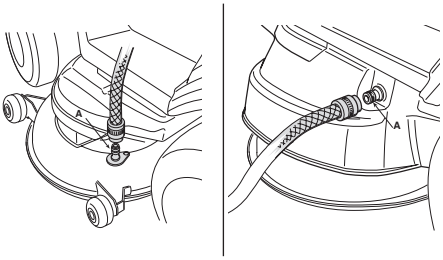

36

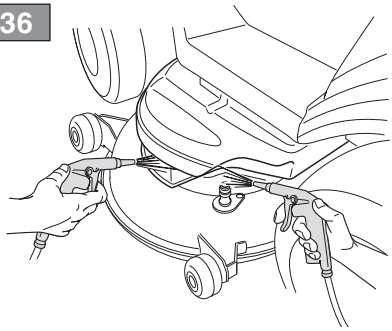

37

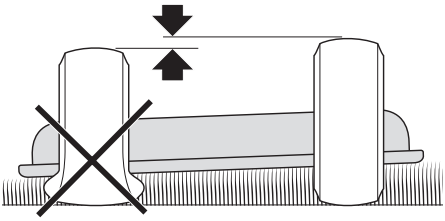

38

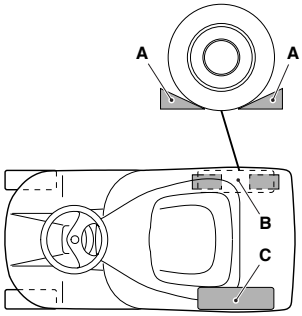

39

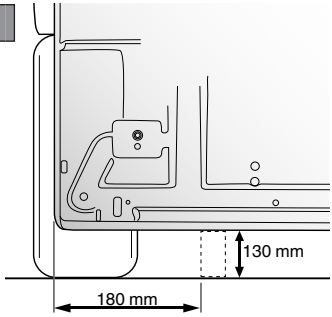

40

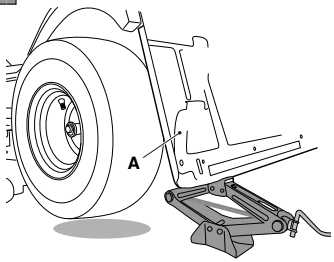

41

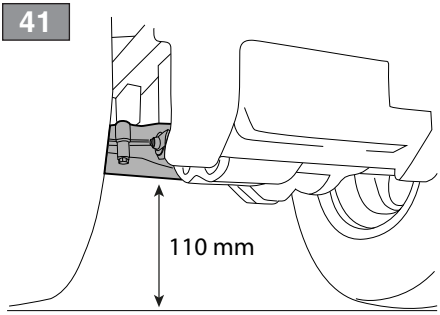

42

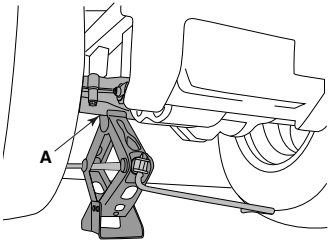

43

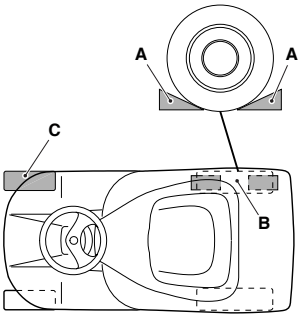

44

T*, TC*

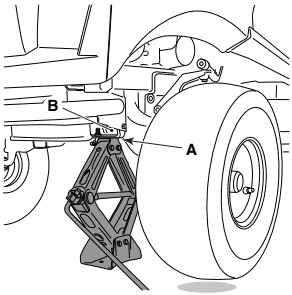

45

TH*

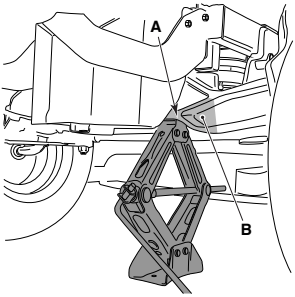

46

TH4*

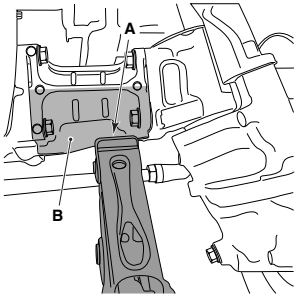

47

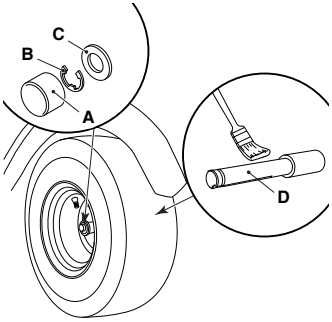

48

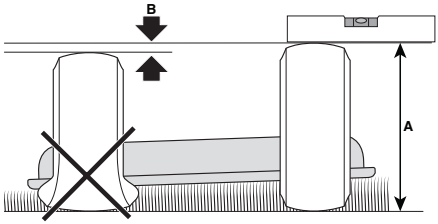

49

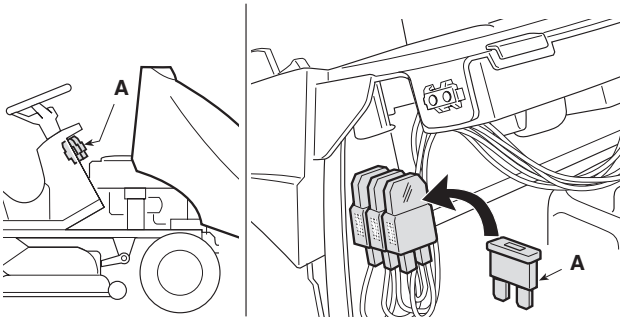

54

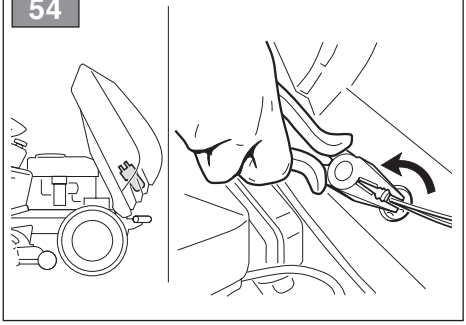

55

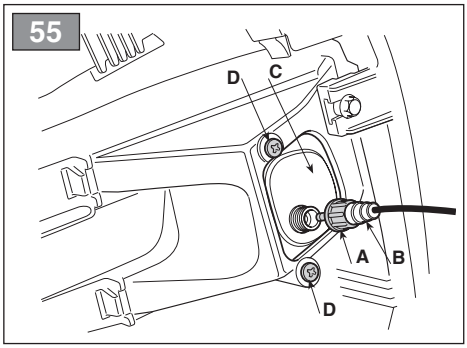

50

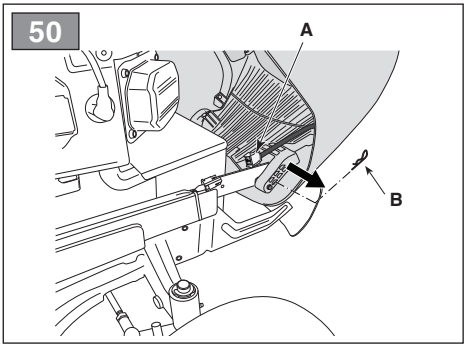

51

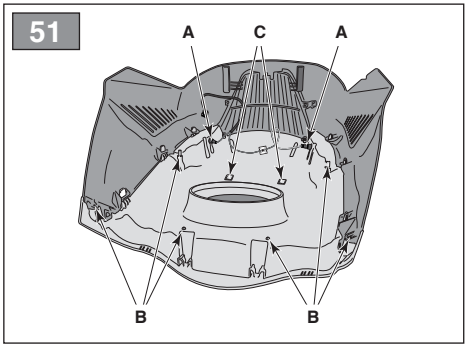

52

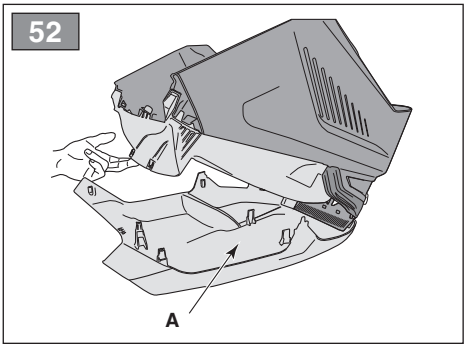

53

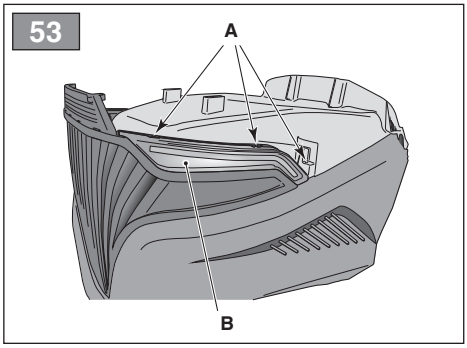

56

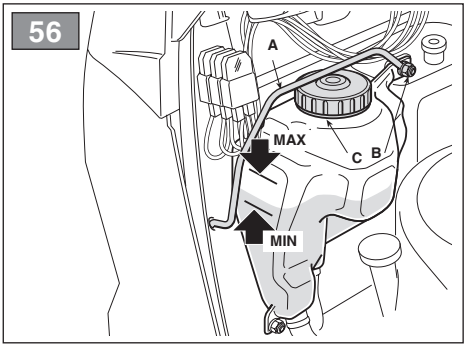

57

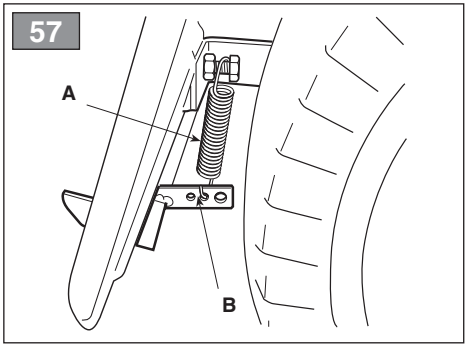

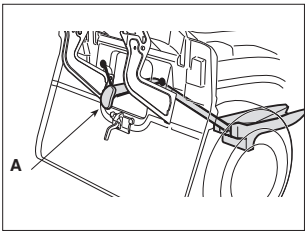
A

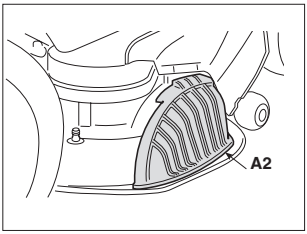
A2

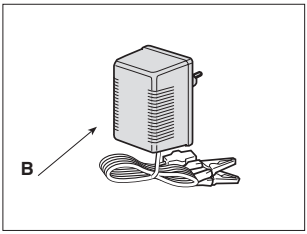
B

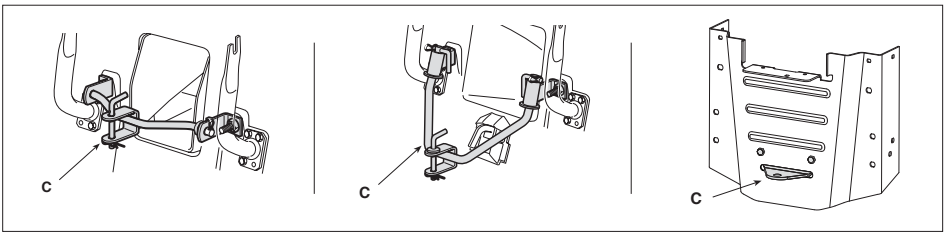
C
C
C

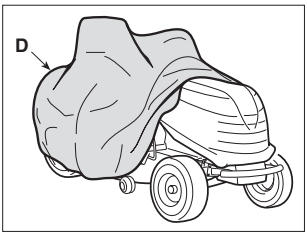
D

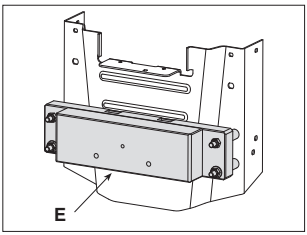
E

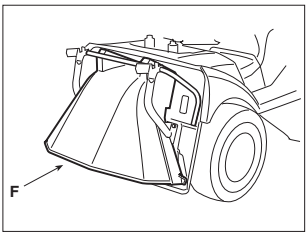
F

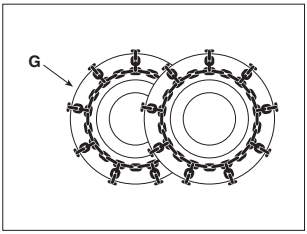
G

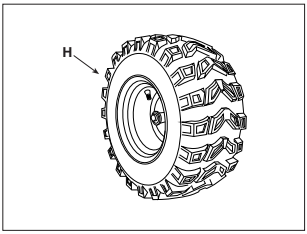
H

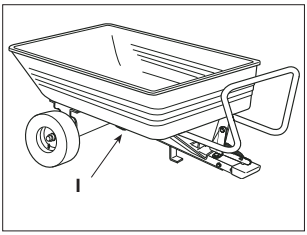
I

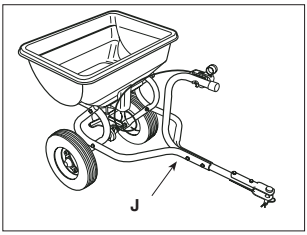
J

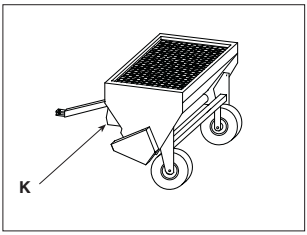
K

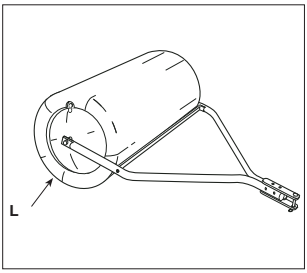
L

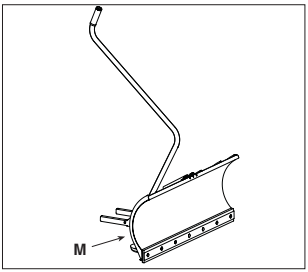
M

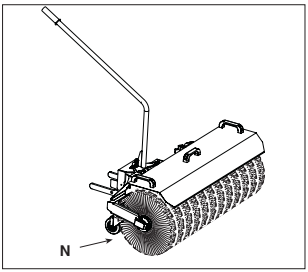
N

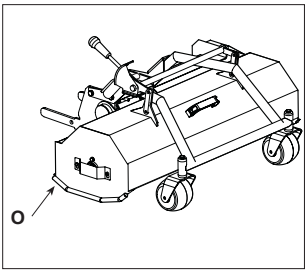
O

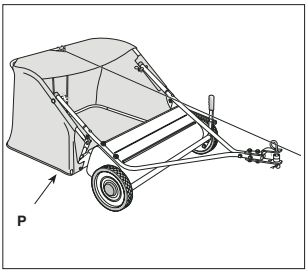
P

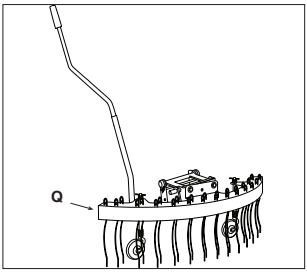
Q

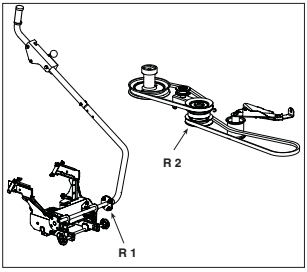
R 2
R 1

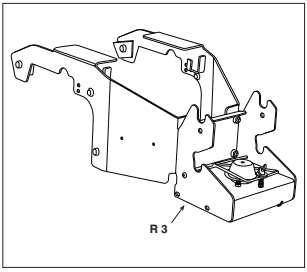
R 3

[1]	DATI TECNICI		T* - TC* 92 Series	T* - TC* 102 Series
[2]	Potenza nominale *	kW	6,0 ÷ 11,2	6,0 ÷ 12,4
[3]	Giri al minuto *	min^{-1}	2600 ÷ 2700 ± 100	2300 ÷ 2500 ± 100
[4]	Impianto elettrico	V	12	12
[5]	Capacità del serbatoio carburante	l	7,0	7,0
[6]	Pneumatici anteriori		15 x 6,00-6	15 x 6,00-6
[7]	Pneumatici posteriori		18 x 8,50-8	18 x 8,50-8
[8]	Pressione gonfiaggio anteriore	bar	1,0	1,0
[9]	Pressione gonfiaggio posteriore	bar	1,2	1,2
[10]	Altezza di taglio	cm	3 ÷ 9	3 ÷ 9
[11]	Larghezza di taglio	cm	88	101
[12]	Raggio minimo di erba non tagliata	cm	101	96
[13]	Codice dispositivo di taglio		82004344/1-82004345/1 (standard+mulching)	82004341/1-82004340/1 (standard) 82004348/0-82004347/0 (mulching)
[14]	Velocità di avanzamento (indicativa) a 3000 min^{-1}	km/h	0 ÷ 8,8	0 ÷ 8,8
[15]	Limite di velocità con catene da neve (se accessorio previsto)	km/h	8,8	8,8
[16]	Limite di carico per dispostivo di traino (Forza verticale massima)	N (kg)	245 (25)	245 (25)
[17]	Limite di carico per dispostivo di traino (Peso massimo rimorchiabile)	N (kg)	980 (100)	980 (100)
[18]	Inclinazione massima consentita		10° (17%)	10° (17%)
[19]	Dimensioni			
[20]	Lunghezza	mm		
[21]	Lunghezza con sacco (Lunghezza senza sacco)	mm	2300 ÷ 2418 1780	2300 ÷ 2418 1780
[22]	Larghezza	mm	956	1050
[23]	Larghezza con deflettore di scarico laterale (Larghezza senza deflettore di scarico laterale)			
[24]	Altezza	mm	1070	1070
[25]	Massa della macchina con serbatoio vuoto *	kg	220 ÷ 225	216 ÷ 240
[26] [27]	Livello di pressione acustica (max.) Incertezza di misura	dB(A) dB(A)	84 2,6	84 1,7
[28] [27]	Livello di potenza acustica misurato (max.) Incertezza di misura	dB(A) dB(A)	99 1,7	100 0,8
[29]	Livello di potenza acustica garantito	dB(A)	100	100
[30] [27]	Livello di vibrazioni al posto di guida (max.) Incertezza di misura	m/s^2 m/s^2	1,7 0,85	1 0,23
[31] [27]	Livello di vibrazioni al volante (max.) Incertezza di misura	m/s^2 m/s^2	2,4 1,2	4 2,31

* Per il dato specifico, fare riferimento a quanto indicato nell'etichetta di identificazione della macchina.

[1]	DATI TECNICI		T* 108 Series	T* 118 Series
[2]	Potenza nominale *	kW	8,2 ÷ 13,59	11,2 ÷ 13,59
[3]	Giri al minuto *	min^{-1}	2600 ÷ 2700 ± 100	2700 ± 100
[4]	Impianto elettrico	V	12	12
[5]	Capacità del serbatoio carburante	l	8,0	14,0
[6]	Pneumatici anteriori		15 x 6,00-6	15 x 6,00-6 16 x 6,00-8
[7]	Pneumatici posteriori		18 x 8,50-8 20 x 10,00-10	20 x 10,0-10
[8]	Pressione gonfiaggio anteriore	bar	1,0	1,0
[9]	Pressione gonfiaggio posteriore	bar	1,4	1,4
[10]	Altezza di taglio	cm	3 ÷ 9	3 ÷ 9
[11]	Larghezza di taglio	cm	105	121
[12]	Raggio minimo di erba non tagliata	cm	120	111
[13]	Codice dispositivo di taglio		182004370/0 (standard) 182004357/0 (mulching)	182004359/0 (standard) 182004361/0 (mulching)
[14]	Velocità di avanzamento (indicativa) a 3000 min^{-1}	km/h	0 ÷ 9,2	0 ÷ 9,2
[15]	Limite di velocità con catene da neve (se accessorio previsto)	km/h	9,2	9,2
[16]	Limite di carico per dispostivo di traino (Forza verticale massima)	N (kg)	294 (30)	294 (30)
[17]	Limite di carico per dispostivo di traino (Peso massimo rimorchiabile)	N (kg)	490 (50)	490 (50)
[18]	Inclinazione massima consentita		10° (17%)	10° (17%)
[19]	Dimensioni			
[20]	Lunghezza	mm	1860	1860
[21]	Lunghezza con sacco (Lunghezza senza sacco)	mm	- -	- -
[22]	Larghezza	mm	-	-
[23]	Larghezza con deflettore di scarico laterale (Larghezza senza deflettore di scarico laterale)		1330 (1118)	1520 (1300)
[24]	Altezza	mm	1095	1095
[25]	Massa della macchina con serbatoio vuoto *	kg	200 ÷ 240	230 ÷ 270
[26] [27]	Livello di pressione acustica (max.) Incertezza di misura	dB(A) dB(A)	83 1,2	88 0,5
[28] [27]	Livello di potenza acustica misurato (max.) Incertezza di misura	dB(A) dB(A)	100 0,63	105 0,78
[29]	Livello di potenza acustica garantito	dB(A)	100	105
[30] [27]	Livello di vibrazioni al posto di guida (max.) Incertezza di misura	m/s^2 m/s^2	0,7 0,25	0,7 0,16
[31] [27]	Livello di vibrazioni al volante (max.) Incertezza di misura	m/s^2 m/s^2	2,3 0,92	2,3 0,92

* Per il dato specifico, fare riferimento a quanto indicato nell'etichetta di identificazione della macchina.

[1]	DATI TECNICI		T* - TC* 122 Series	TH* 102 Series
[2]	Potenza nominale *	kW	11,2 ÷ 13,9	6,0 ÷ 12,4
[3]	Giri al minuto *	min^{-1}	2600 ÷ 2900 ± 100	2400 ÷ 2500 ± 100
[4]	Impianto elettrico	V	12	12
[5]	Capacità del serbatoio carburante	l	7,0	10
[6]	Pneumatici anteriori		15 x 6,00-6	16 x 6,00-8
[7]	Pneumatici posteriori		18 x 8,50-8	20 x 10,0-10
[8]	Pressione gonfiaggio anteriore	bar	1,0	1,0
[9]	Pressione gonfiaggio posteriore	bar	1,2	1,4
[10]	Altezza di taglio	cm	3 ÷ 9	2 ÷ 10
[11]	Larghezza di taglio	cm	121	101
[12]	Raggio minimo di erba non tagliata	cm	90	101
[13]	Codice dispositivo di taglio		82004343/0-82004342/0 (standard) 82004350/0-82004349/0 (mulching)	82004341/1-82004340/1 (standard) 82004348/0-82004347/0 (mulching)
[14]	Velocità di avanzamento (indicativa) a 3000 min^{-1}	km/h	0 ÷ 8,8	0 ÷ 9,8
[15]	Limite di velocità con catene da neve (se accessorio previsto)	km/h	8,8	9,8
[16]	Limite di carico per dispostivo di traino (Forza verticale massima)	N (kg)	245 (25)	245 (25)
[17]	Limite di carico per dispostivo di traino (Peso massimo rimorchiabile)	N (kg)	980 (100)	980 (100)
[18]	Inclinazione massima consentita		10° (17%)	10° (17%)
[19]	Dimensioni			
[20]	Lunghezza	mm		
[21]	Lunghezza con sacco (Lunghezza senza sacco)	mm	2300 ÷ 2418 1780	2620 2000
[22]	Larghezza	mm	1260	1055
[23]	Larghezza con deflettore di scarico laterale (Larghezza senza deflettore di scarico laterale)			
[24]	Altezza	mm	1070	1200
[25]	Massa della macchina con serbatoio vuoto *	kg	216 ÷ 240	270 ÷ 310
[26] [27]	Livello di pressione acustica (max.) Incertezza di misura	dB(A) dB(A)	89,2 0,2	84,7 0,3
[28] [27]	Livello di potenza acustica misurato (max.) Incertezza di misura	dB(A) dB(A)	104 0,81	100 0,2
[29]	Livello di potenza acustica garantito	dB(A)	105	100
[30] [27]	Livello di vibrazioni al posto di guida (max.) Incertezza di misura	m/s^2 m/s^2	0,8 0,19	0,9 0,18
[31] [27]	Livello di vibrazioni al volante (max.) Incertezza di misura	m/s^2 m/s^2	2,3 0,87	3,0 0,97

* Per il dato specifico, fare riferimento a quanto indicato nell'etichetta di identificazione della macchina.

[1]	DATI TECNICI		TH* 118 Series	TH* 122 Series
[2]	Potenza nominale *	kW	13,79 ÷ 14,4	11,3 ÷ 13,9
[3]	Giri al minuto *	min^{-1}	2700 ± 100	2600 ÷ 2800 ± 100
[4]	Impianto elettrico	V	12	12
[5]	Capacità del serbatoio carburante	l	10	10
[6]	Pneumatici anteriori		16 x 6,00-8	16 x 6,00-8
[7]	Pneumatici posteriori		20 x 10,0-10	20 x 10,00-10
[8]	Pressione gonfiaggio anteriore	bar	1,0	1,0
[9]	Pressione gonfiaggio posteriore	bar	1,4	1,4
[10]	Altezza di taglio	cm	2 ÷ 10	2 ÷ 10
[11]	Larghezza di taglio	cm	121	121
[12]	Raggio minimo di erba non tagliata	cm	84	90
[13]	Codice dispositivo di taglio		182004359/0 (standard) 182004361/0 (mulching)	82004343/0-82004342/0 (standard) 82004350/0-82004349/0 (mulching)
[14]	Velocità di avanzamento (indicativa) a 3000 min^{-1}	km/h	0 ÷ 9,8	0 ÷ 9,8
[15]	Limite di velocità con catene da neve (se accessorio previsto)	km/h	9,8	9,8
[16]	Limite di carico per dispostivo di traino (Forza verticale massima)	N (kg)	294 (30)	245 (25)
[17]	Limite di carico per dispostivo di traino (Peso massimo rimorchiabile)	N (kg)	490 (50)	980 (100)
[18]	Inclinazione massima consentita		10° (17%)	10° (17%)
[19]	Dimensioni			
[20]	Lunghezza	mm	1950	
[21]	Lunghezza con sacco (Lunghezza senza sacco)	mm	-	2620 2000
[22]	Larghezza	mm	-	1266
[23]	Larghezza con deflettore di scarico laterale (Larghezza senza deflettore di scarico laterale)		1520 (1300)	
[24]	Altezza	mm	1200	1200
[25]	Massa della macchina con serbatoio vuoto *	kg	270 ÷ 310	270 ÷ 310
[26] [27]	Livello di pressione acustica (max.) Incertezza di misura	dB(A) dB(A)	89 0,79	88,5 0,8
[28] [27]	Livello di potenza acustica misurato (max.) Incertezza di misura	dB(A) dB(A)	105 0,77	104 0,6
[29]	Livello di potenza acustica garantito	dB(A)	105	105
[30] [27]	Livello di vibrazioni al posto di guida (max.) Incertezza di misura	m/s^2 m/s^2	0,8 0,21	0,70 1,02
[31] [27]	Livello di vibrazioni al volante (max.) Incertezza di misura	m/s^2 m/s^2	2,9 1,04	3,95 1,11

* Per il dato specifico, fare riferimento a quanto indicato nell'etichetta di identificazione della macchina.

[58]	ACCESSORI A RICHIESTA	
[58.A1] [58.A2]	Kit “mulching”	✓
[58.B]	Carica batteria di mantenimento	✓
[58.C]	Kit traino	✓
[58.D]	Telo di copertura	✓
[58.E]	Kit pesi posteriori	✓
[58.F]	Kit di protezione scarico posteriore *(solo per modelli con raccolta posteriore)*	✓
[58.G]	Catene da neve (18”, 20”)	✓
[58.H]	Ruote da fango/neve (18”, 20”)	✓
[58.I]	Rimorchio	45-03453-997 ST-1405
[58.J] [58.K]	Spargitore	45-03153-997 PA402 (TH* Series)
[58.L]	Rullo per erba	45-02671 45-02681
[58.M]	Spalaneve a lama	ST-1401 (+ KIT 1503) (T* - TC* Series) SNB 1501 (T* - TC* Series) AE-015-001GI (+ AN-156-001GI) (TH* Series)
[58.N]	Spazzatrice frontale	SWR-1401 (+ KIT 1503) (T* - TC* Series) AD-200-001GI (+ AN-156-001GI) (TH* Series)
[58.O]	Trinciatrice	FLM-1406 (+ KIT 1503) (T* - TC* Series)
[58.P]	*(Solo per modelli SD series)*	
	Raccoglitore foglie ed erba 38”	45-03313-997
	Raccoglitore foglie ed erba 42”	45-02616-997 45-03201-997
[58.Q]	Rastrello frontale	AI-200-001GI (+ AN-156-001GI) (TH* Series)
[58.R1] [58.R2]	Interfaccia di sollevamento + Presa di potenza (PTO)	KIT 1503 (T* - TC* Series)
[58.R3]	Presa di potenza (PTO)	AN-156-001GI (TH* Series)

[32] **TABELLA PER LA CORRETTA COMBINAZIONE DEGLI ACCESSORI**								
		[32.A] **ACCESSORI POSTERIORI**						
		[58.I]	[58.J]	[58.K]	[58.L]	[58.P]	[58.G]	[58.H]
[32.B] **ACCESSORI FRONTALI**	[58.G]	✓	✓	✓	-	-	-	-
	[58.H]	✓	✓	✓	-	-	-	-
	[58.M]	-	✓	✓	-	-	✓	✓
	[58.N]	-	✓	✓	-	-	✓	✓
	[58.O]	-	-	-	-	✓	-	✓
	[58.Q]	-	✓	-	✓	-	-	-

[1] **BG - ТЕХНИЧЕСКИ ДАННИ**
[2] Номинална мощност *
[3] Обороти в минута *
[4] Електрическа инсталация
[5] Вместимост на резервоара за гориво
[6] Предни гуми
[7] Задни гуми
[8] Налягане на предно напомпване
[9] Налягане на задно напомпване
[10] Височина на косене
[11] Ширина на косене
[12] Минимален радиус на неподрязана трева
[13] Код на инструмента за рязане
[14] Указателна скорост на придвижване) на 3000 min-1
[15] Ограничение на скоростта с вериги за сняг (ако тази принадлежност е предвидена)
[16] Ограничение на тежестта за тегличното устройство (Максимална вертикална сила)
[17] Ограничение на тежестта за тегличното устройство (Максимално тегло за теглене)
[18] Разрешен максимален наклон
[19] Размери
[20] Дължина
[21] Дължина с чувал (Дължина без чувал)
[22] Ширина
[23] Ширина с дефлектор за странично разтоварване (Ширина без дефлектор за странично разтоварване)
[24] Височина
[25] Маса на машината с празен резервоар *
[26] Ниво на звуково налягане (макс.)
[27] Несигурност на измерване
[28] Измерено ниво на звукова мощност (макс.)
[29] Гарантирано ниво на звукова мощност
[30] Ниво на вибрации на мястото на водача (макс.)
[31] Ниво на вибрации на волана (макс.)
[32] Таблица за правилното комбиниране на принадлежностите
[32.A] Задни принадлежности
[32.B] Челни принадлежности
[58] Принадлежности по заявка
[58.A1, 58.A2] Комплект "мулчиране"
[58.B] Зарядно устройство за поддържане
[58.C] Комплект теглич
[58.D] Платно за покриване
[58.E] Комплект задни тежести
[58.F] Комплект за защита за задно разтоварване*(само за модели със задно събиране)*
[58.G] Вериги за сняг (18", 20")
[58.H] Колела за кал/сняг (18", 20")
[58.I] Ремарке
[58.J, 58.K] Приспособление за разсейване
[58.L] Ролка за трева
[58.M] Снегорин с острие
[58.N] Челна метачка
[58.O] Резачка
[58.P] *(Само за модели SD series)* Събирач на листа и трева 38" Събирач на листа и трева 42"
[58.Q] Предно гребло
[58.R1, 58.R2] Интерфейс за повдигане + Силоотводен вал (PTO)
[58.R3] Силоотводен вал (PTO)

* За конкретни данни, вижте посоченото на идентификационния етикет на машината.

[1] **BS - TEHNIČKI PODACI**
[2] Nazivna snaga *
[3] Okretaji u minuti *
[4] Električni sistem
[5] Zapremina spremnika goriva
[6] Prednje gume
[7] Stražnje gume
[8] Pritisak u prednjim gumama
[9] Pritisak u stražnjim gumama
[10] Visina košenja
[11] Širina košenja
[12] Minimalan radijus nepokošene trave
[13] Br. dijela uređaja za košenje
[14] Brzina vožnje prema naprijed (indikativno) pri 3000 min-1
[15] Ograničenje brzine s lancima za snijeg (ako postoji)
[16] Ograničenje opterećenja za vučni uređaj (maksimalna okomita sila)
[17] Ograničenje opterećenja za vučni uređaj (dozvoljena visina vuče)
[18] Maksimalni dozvoljeni nagib
[19] Dimenzije
[20] Dužina
[21] Dužina s vrećom za sakupljanje trave (dužina bez vreće za sakupljanje trave)
[22] Širina
[23] Širina s bočnim deflektorom za izbacivanje (širina bez bočnog deflektora za izbacivanje)
[24] Visina
[25] Masa mašine s praznim spremnikom *
[26] Nivo zvučnog pritiska (maks.)
[27] Mjerna nesigurnost
[28] Izmjereni nivo zvučne snage (maks.)
[29] Garantirani nivo zvučne snage
[30] Nivo vibracija u položaju vozača (maks.)
[31] Nivo vibracija na volanu (maks.)
[32] Tabela kompatibilnosti dodatne opreme
[32.A] Stražnja dodatna oprema
[32.B] Prednja dodatna oprema
[58] Opcionalna dodatna oprema
[58.A1, 58.A2] Komplet za malčiranje
[58.B] Float punjač akumulatora
[58.C] Komplet za vuču
[58.D] Zaštitna pokrovna cerada
[58.E] Komplet stražnjih utega
[58.F] Sigurnosni komplet za stražnje izbacivanje *(samo modeli sa stražnjom vrećom za sakupljanje trave)*
[58.G] Lanci za snijeg (18", 20")
[58.H] Točkovi za snijeg/blato (18", 20")
[58.I] Prikolica
[58.J, 58.K] Posipač
[58.L] Valjak za travu
[58.M] Plug za snijeg s nožem
[58.N] Prednja četka
[58.O] Sjeckalica
[58.P] *(Samo za modele SD serije)* Skupljač lišća i trave 38" Skupljač lišća i trave 42"
[58.Q] Prednje grablje
[58.R1, 58.R2] Sučelje za podizanje + kardansko vratilo (PTO)
[58.R3] kardansko vratilo (PTO)

* Dodatne informacije potražite na identifikacijskoj naljepnici uređaja.

[1] **CS - TECHNICKÉ PARAMETRY**
[2] Jmenovitý výkon *
[3] Otáčky za minutu *
[4] Elektroinstalace
[5] Kapacita palivové nádrže
[6] Přední pneumatiky
[7] Zadní pneumatiky
[8] Tlak huštění předních pneumatik
[9] Tlak huštění zadních pneumatik
[10] Výška sečení
[11] Šířka záběru
[12] Minimální poloměr neposečené trávy
[13] Kód žacího ústrojí
[14] Rychlost pojezdu (orientační) při 3 000 min-1
[15] Rychlostní limit se sněhovými řetězy (je-li toto příslušenství ve výbavě)
[16] Mezní zatížení tažného zařízení (maximální svislá síla)
[17] Mezní zatížení tažného zařízení (maximální přípojná hmotnost)
[18] Maximální přípustný náklon
[19] Rozměry
[20] Délka
[21] Délka s košem (délka bez koše)
[22] Šířka
[23] Šířka s vychylovačem bočního výhozu (šířka bez vychylovače bočního výhozu)
[24] Výška
[25] Hmotnost stroje s prázdnou nádrží *
[26] Hladina akustického tlaku (max.)
[27] Nepřesnost měření
[28] Měřená hladina akustického výkonu (max.)
[29] Garantovaná hladina akustického výkonu
[30] Hladina vibrací na místě řidiče (max.)
[31] Hladina vibrací na volantu (max.)
[32] Tabulka správné kombinace příslušenství
[32.A] Zadní příslušenství
[32.B] Přední příslušenství
[58] Příslušenství na vyžádání
[58.A1, 58.A2] Mulčovací sada
[58.B] Udržovací nabíječka akumulátoru
[58.C] Sada tažného zařízení
[58.D] Krycí plachta
[58.E] Sada zadních závaží
[58.F] Sada ochranného krytu zadního výhozu *(pouze u modelů se zadním sběrem)*
[58.G] Sněhové řetězy (18", 20")
[58.H] Kola do bláta/sněhu (18", 20")
[58.I] Přívěs
[58.J, 58.K] Sypač
[58.L] Travní válec
[58.M] Sněhová radlice
[58.N] Přední zametač
[58.O] Drtička
[58.P] *(Pouze u modelů SD series)* Sběrač listí a trávy 38" Sběrač listí a trávy 42"
[58.Q] Přední pohrabovač
[58.R1, 58.R2] Zdvihací rozhraní + pomocný pohon (PTO)
[58.R3] pomocný pohon (PTO)

* Konkrétní údaj naleznete na identifikačním štítku stroje.

[1] **DA - TEKNISKE DATA**
[2] Nominel effekt
[3] Omdrejninger i minuttet
[4] Elektrisk anlæg
[5] Brændstofstankens kapacitet
[6] Forhjulenes dæk
[7] Baghjulenes dæk
[8] Forhulenes tryk
[9] Baghulenes tryk
[10] Klippehøjde
[11] Klippebredde
[12] Minimumsradius af ikke klippet græs
[13] Skæreanordningens kode
[14] Fremføringshastighed (vejledende) ved 3000 min-1
[15] Fartgrænse med snekæder (hvis tilbehøret er forudset)
[16] Belastningsgrænse for trækanordning (Maksimal lodret kraft)
[17] Belastningsgrænse for trækanordning (Maksimalt tilladt trukket vægt)
[18] Maksimal tilladt terrænstigning
[19] Mål
[20] Længde
[21] Længde med pose (Længde uden pose)
[22] Bredde
[23] Bredde med sideudkastskærm (Bredde uden sideudkastskærm)
[24] Højde
[25] Maskinvægt med tom tank*
[26] Lydtryksniveau (max.)
[27] Måleusikkerhed
[28] Målt lydeffektniveau (max.)
[29] Garanteret lydeffektniveau
[30] Vibrationsniveau ved førerpladsen (max.)
[31] Vibrationsniveau ved rattet (max.)
[32] Tabel over den korrekte kombination af tilbehør
[32.A] Bagmonterede tilbehør
[32.B] Frontale tilbehør
[58] Tilbehør på forespørgsel
[58.A1, 58.A2] Kit “multiclip”
[58.B] Udligningsbatterilader
[58.C] Kit anhænger
[58.D] Dækken
[58.E] Kit med bagmonteret balast
[58.F] Kit til beskyttelse af bagudkast *(angår kun modeller med opsamling bagpå)*
[58.G] Snekæder (18”, 20”)
[58.H] Mudder- og vinterhjul (18”, 20”)
[58.I] Anhænger
[58.J, 58.K] Spreder
[58.L] Græsrulle
[58.M] Sneplov
[58.N] Frontal fejemaskine
[58.O] Skæremaskine
[58.P] *(Angår kun modellerne SD series)* Opsamlingsmaskine til blade og græs 38” Opsamlingsmaskine til blade og græs 42”
[58.Q] Frontal rive
[58.R1, 58.R2] Løftegrænseflade + Kraftudtag (PTO)
[58.R3] Kraftudtag (PTO)

* Indhent oplysninger om det specifikke data i maskinens identifikationsetiket.

[1] **DE - TECHNISCHE DATEN**
[2] Nennleistung*
[3] Drehungen pro Minute *
[4] Elektrische Anlage
[5] Inhalt des Kraftstofftanks
[6] Vorderreifen
[7] Hinterreifen
[8] Reifendruck vorne
[9] Reifendruck hinten
[10] Schnitthöhe
[11] Schnittbreite
[12] Mindestradius nicht geschnittenes Gras
[13] Code Schneidvorrichtung
[14] Fahrgeschwindigkeit (indikativ) bei 3000 min-1
[15] Geschwindigkeitsbegrenzung mit Schneekette (wenn Zubehör vorgesehen)
[16] Tragfähigkeit für Zugvorrichtung (maximale vertikale Kraft)
[17] Tragfähigkeit für Zugvorrichtung (maximales Anhängegewicht)
[18] Maximal zulässige Neigung
[19] Abmessungen
[20] Länge
[21] Länge mit Grasfangeinrichtung (Länge ohne Grasfangeinrichtung)
[22] Breite
[23] Breite mit Deflektor des seitlichen Auswurfs (Breite ohne Deflektor des seitlichen Auswurfs)
[24] Höhe
[25] Maschinenmasse bei leerem Tank*
[26] Schallpegel (max.)
[27] Messungenauigkeit
[28] Gemessener Schalleistungspegel (max.)
[29] Sichergestellter Schalleistungspegel
[30] Schwingungen am Fahrersitz (max.)
[31] Schwingungen am Lenkrad (max.)
[32] Tabelle für die richtige Kombination der Anbaugeräte
[32.A] Hintere Anbaugeräte
[32.B] Vordere Anbaugeräte
[58] Anbaugeräte auf Anfrage
[58.A1, 58.A2] Mulching-Kit
[58.B] Batterieladegerät
[58.C] Zugvorrichtung
[58.D] Abdeckung
[58.E] Kit hintere Gewichte
[58.F] Kit der Schutzvorrichtungen Auswurf hinten *(nur für Modelle mit Sammelvorrichtung hinten)*
[58.G] Schneeketten (18”, 20”)
[58.H] Matsch- und Schneeräder (18”, 20”)
[58.I] Anhänger
[58.J, 58.K] Streuer
[58.L] Rasenwalze
[58.M] Schneepflug
[58.N] Kehrmaschine vorne
[58.O] Häckselmaschine
[58.P] *(Nur für Modelle der SD Reihe)* Sammler für Laub und Gras 38” Sammler für Laub und Gras 42”
[58.Q] Harke vorne
[58.R1, 58.R2] Nebenabtriebeinheit + Steckdose (PTO)
[58.R3] Steckdose (PTO)

* Für spezielle Daten beziehen Sie sich auf die Angaben auf dem Typenschild der Maschine.

[1] **EL - ΤΕΧΝΙΚΑ ΣΤΟΙΧΕΙΑ**
[2] Ονομαστική ισχύς *
[3] Στροφές ανά λεπτό *
[4] Ηλεκτρική εγκατάσταση
[5] Χωρητικότητα ρεζερβουάρ καυσίμου
[6] Εμπρόσθια ελαστικά
[7] Πίσω ελαστικά
[8] Πίεση φουσκώματος εμπρός
[9] Πίεση φουσκώματος πίσω
[10] Ύψος κοπής
[11] Πλάτος κοπής
[12] Ελάχιστη ακτίνα μη κομμένου χόρτου
[13] Κωδικός συστήματος κοπής
[14] Ταχύτητα προώθησης (ενδεικτική) σε 3000 min-1
[15] Όριο ταχύτητας με χιοναλυσίδες (εάν προβλέπεται αυτό το αξεσουάρ)
[16] Όριο φορτίου για της διάταξη ρυμούλκησης (Μέγιστη κάθετη ισχύς)
[17] Όριο φορτίου για της διάταξη ρυμούλκησης (Μέγιστο ρυμουλκούμενο βάρος)
[18] Μέγιστη επιτρεπόμενη κλίση
[19] Διαστάσεις
[20] Μήκος
[21] Μήκος με κάδο (Μήκος χωρίς κάδο)
[22] Πλάτος
[23] Πλάτος με πλευρικό εκτροπέα αποβολής (Πλάτος χωρίς πλευρικό εκτροπέα αποβολής)
[24] Ύψος
[25] Μάζα του μηχανήματος με άδειο ρεζερβουάρ *
[26] Στάθμη ηχητικής πίεσης (μέγ.)
[27] Αβεβαιότητα μέτρησης
[28] Μετρημένη στάθμη ηχητικής πίεσης (μέγ.)
[29] Εγγυημένη στάθμη ηχητικής πίεσης
[30] Επίπεδο κραδασμών στη θέση οδήγησης (μέγ.)
[31] Επίπεδο κραδασμών στο τιμόνι (μέγ.)
[32] Πίνακας για το σωστό συνδυασμό των παρελκόμενων
[32.A] Πίσω παρελκόμενα
[32.B] Εμπρόσθια παρελκόμενα
[58] Παρελκόμενα κατόπιν παραγγελίας
[58.A1, 58.A2] Κιτ “mulching”
[58.B] Φορτιστής συντήρησης μπαταρίας
[58.C] Κιτ ρυμούλκησης
[58.D] Κάλυμμα προστασίας
[58.E] Κιτ πίσω βαρών
[58.F] Κιτ προστατευτικού πίσω αποβολής *(μόνο για μοντέλα με πίσω περισυλλογή)*
[58.G] Χιοναλυσίδες (18”, 20”)
[58.H] Τροχοί για λάσπη / χιόνι (18”, 20”)
[58.I] Ρυμουλκό
[58.J, 58.K] Διανομέας
[58.L] Κύλινδρος χλόης
[58.M] Εκχιονιστικό με λάμα
[58.N] Εμπρόσθιο σάρωθρο
[58.O] Τεμαχιστής
[58.P] *(Μόνο για τα μοντέλα της σειράς SD)* Συλλέκτης φύλλων και χόρτων 38” Συλλέκτης φύλλων και χόρτων 42”
[58.Q] Εμπρόσθιο δίκρανο
[58.R1, 58.R2] Διασύνδεση ανύψωσης + Δυναμοδότης (PTO)
[58.R3] Δυναμοδότης (PTO)

* Για το συγκεκριμένο στοιχείο, ανατρέξτε σε όσα αναγράφονται στην ετικέτα αναγνώρισης του μηχανήματος.

[1] **EN - TECHNICAL DATA**
[2] Nominal power *
[3] Revolutions per minute *
[4] Electrical system
[5] Fuel tank capacity
[6] Front tyres
[7] Rear tyres
[8] Front tyre pressure
[9] Rear tyre pressure
[10] Cutting height
[11] Cutting width
[12] Minimum radius of uncut grass
[13] Cutting means part n.
[14] Forward speed (indicative) at 3000 min-1
[15] Speed limit with snow chains (if fitted)
[16] Loading limit for towing device (Maximum vertical force)
[17] Loading limit for towing device (Permissible towing weight)
[18] Maximum permissible gradient
[19] Dimensions
[20] Length
[21] Length with catcher bag (Length without catcher bag)
[22] Width
[23] Width with side discharge chute (Width without side discharge chute)
[24] Height
[25] Machine weight with empty tank *
[26] Sound pressure level (max.)
[27] Measurement uncertainty
[28] Measured acoustic power level (max.)
[29] Guaranteed acoustic power level
[30] Vibration level at driver's position (max.)
[31] Vibration level at steering wheel (max.)
[32] Attachment compatibility table
[32.A] Rear attachments
[32.B] Front attachments
[58] Optional attachments
[58.A1, 58.A2] "Mulching" kit
[58.B] Battery float charger
[58.C] Towing kit
[58.D] Protective canvas cover
[58.E] Rear weights kit
[58.F] Rear discharge safety kit (models with rear grass catcher only)
[58.G] Snow chains (18”, 20”)
[58.H] Snow/mud wheels (18”, 20”)
[58.I] Trailer
[58.J, 58.K] Sprinkler
[58.L] Grass roller
[58.M] Snow blade
[58.N] Front sweeper
[58.O] Shredder
[58.P] *(For SD series models only)*
Leaf and collector 38”
Leaf and collector 42”
[58.Q] Front rake
[58.R1, 58.R2] Lifting interface + Power Take-Off (PTO)
[58.R3] Power Take-Off (PTO)

* For specific information, refer to the information on the machine identification label.

[1] **ES - DATOS TÉCNICOS**
[2] Potencia nominal *
[3] Revoluciones por minuto *
[4] Instalación eléctrica
[5] Capacidad del depósito carburante
[6] Neumáticos anteriores
[7] Neumáticos posteriores
[8] Presión de inflado anterior
[9] Presión de inflado posterior
[10] Altura de corte
[11] Anchura de corte
[12] Radio mínimo de hierba no cortada
[13] Código del dispositivo de corte
[14] Velocidad de avance (indicativa) a 3000 min-1
[15] Límite de velocidad con cadenas para nieve (si está previsto el accesorio)
[16] Límite de carga para el dispositivo de arrastre (Fuerza vertical máxima)
[17] Límite de carga para el dispositivo de arrastre (Peso máximo a remolcar)
[18] Inclinación máxima permitida
[19] Dimensiones
[20] Longitud
[21] Longitud con la bolsa (Longitud sin la bolsa)
[22] Anchura
[23] Anchura con el deflector de descarga lateral (Anchura sin el deflector de descarga lateral)
[24] Altura
[25] Peso de la máquina con el depósito de combustible vacio *
[26] Nivel de presión acústica (máx.)
[27] Incertidumbre de medida
[28] Nivel de potencia acústica medido (máx.)
[29] Nivel de potencia acústica garantizado
[30] Nivel de vibración en el puesto del conductor (máx.)
[31] Nivel de vibración en el volante (máx.)
[32] Tabla para combinar correctamente los accesorios
[32.A] Accesorios posteriores
[32.B] Accesorios frontales
[58] Accesorios bajo pedido
[58.A1, 58.A2] Kit “mulching”
[58.B] Cargador de batería de mantenimiento
[58.C] Kit de arrastre
[58.D] Lona de cobertura
[58.E] Kit de pesos posteriores
[58.F] Kit de protección de descarga posterior *(solo para los modelos con recolección posterior)*
[58.G] Cadenas para nieve (18”, 20”)
[58.H] Ruedas para fango/nieve (18”, 20”)
[58.I] Remolque
[58.J, 58.K] Esparcidor
[58.L] Rodillo para hierba
[58.M] Quitanieves de cuchilla
[58.N] Barredora frontal
[58.O] Trituradora
[58.P] *(Solo para modelos de SD series)*
Recogedor de hojas y hierba 38”
Recogedor de hojas y hierba 42”
[58.Q] Rastrillo frontal
[58.R1, 58.R2] Conexión para elevación + Toma de potencia (TDP)
[58.R3] Toma de potencia (TDP)

* Para conocer el dato específico, consultar todo lo indicado en la etiqueta de identificación de la máquina.

[1] **ET - TEHNILISED ANDMED**
[2] Nimivõimsus *
[3] Pööret minutis *
[4] Elektrisüsteme
[5] Kütusepaagi maht
[6] Esirehvid
[7] Tagarehvid
[8] Esirehvide rõhk
[9] Tagarehvide rõhk
[10] Niidukõrgus
[11] Niidulaius
[12] Lõikamata rohu minimaalne raadius
[13] Lõikeseadme osa nr
[14] Edasiliikumise kiirus (soovituslik) 3000 min-1
[15] Kiirusepiirang lumekettidega (kui need on paigaldatud)
[16] Laadimispiirang vedamisseadmega (maksimaalne vertikaaljõud)
[17] Laadimispiirang vedamisseadmega (lubatud haakemass)
[18] Maksimaalne lubatud kalle
[19] Mõõtmed
[20] Pikkus
[21] Pikkus kogumiskorviga (Pikkus ilma kogumiskorvita)
[22] Laius
[23] Laius koos külgmise väljalaske suunajaga (Laius ilma külgmise väljalaske suunajata)
[24] Kõrgus
[25] Masina mass tühja paagiga*
[26] Helitase (max)
[27] Mõõtmisebatäpsus
[28] Mõõdetud akustilise võimsuse tase (max)
[29] Garanteeritud akustilise võimsuse tase (max)
[30] Vibratsioonitase juhikohal (max)
[31] Vibratsioon rooliratta juures (max)
[32] Tarvikute ühilduvuse tabel
[32.A] Tagumised tarvikud
[32.B] Eesmised tarvikud
[58] Valikulised tarvikud
[58.A1, 58.A2] Multšimiskomplekt
[58.B] Float režiimiga akulaadija
[58.C] Vedamiskomplekt
[58.D] Kaitsev katteriie
[58.E] Tagaraskuste komplekt
[58.F] Tagumise väljalaske ohutuskomplekt *(ainult mudelid tagumise kogumiskorviga)*
[58.G] Lumeketid (18”, 20”)
[58.H] Lume-/mudarehvid (18”, 20”)
[58.I] Järelhaagis
[58.J, 58.K] Puistur
[58.L] Mururull
[58.M] Teraga lumesahk
[58.N] Esipühkija
[58.O] Purustaja
[58.P] *(Üksnes SD seeria mudelitele)*
Lehtede kollektor 38”
Lehtede kollektor 42”
[58.Q] Eesmine kaaruti
[58.R1, 58.R2] Tõsteliides + jõuvõtuvõll (PTO)
[58.R3] jõuvõtuvõll (PTO)

* Lisateabe saamiseks vaadake infot masina tähistussildilt.

[1] **FI - TEKNISET TIEDOT**
[2] Nimellisteho *
[3] Kierroksia minuutissa *
[4] Sähkölaitteisto
[5] Polttoainesäiliön tilavuus
[6] Eturenkaat
[7] Takarenkaat
[8] Täyttöpaine edessä
[9] Täyttöpaine takana
[10] Leikkuukorkeus
[11] Leikkuuleveys
[12] Leikkaamattoman ruohon minimisäde
[13] Leikkuulaitteen koodi
[14] Ajonopeus (suuntaa antava) kun 3000 min-1
[15] Nopeusrajoitus lumiketjuilla (jos lisälaite voidaan asentaa)
[16] Kuormitusrajoitus vetolaitteelle (maksimi pystyvoima)
[17] Kuormitusrajoitus vetolaitteelle (hinattava maksimipaino)
[18] Suurin sallittu kaltevuus
[19] Koko
[20] Pituus
[21] Pituus säkin kanssa (Pituus ilman säkkiä)
[22] Leveys
[23] Leveys sivutyhjennyksen läppäkorkin kanssa (Leveys ilman sivutyhjennyksen läppäkorkkia)
[24] Korkeus
[25] Laitteen kuivapaino *
[26] Äänenpainetaso (maks.)
[27] Epätarkka mittaus
[28] Mitattu äänitehotaso (maks.)
[29] Taattu äänitehotaso
[30] Tärinätaso ohjauspaikalla (maks.)
[31] Tärinätaso ohjauspyörällä (maks.)
[32] Lisävarusteiden yhdistämistaulukko
[32.A] Taakse asennettavat lisävarusteet
[32.B] Eteen asennettavat lisävarusteet
[58] Tilattavat lisävarusteet
[58.A1, 58.A2] Silppuamissarja
[58.B] Ylläpitoakkulaturi
[58.C] Hinaussarja
[58.D] Suojakangas
[58.E] Takapainojen sarja
[58.F] Takatyhjennyksen suojasarja *(vain malleissa joissa keruu tapahtuu takaa)*
[58.G] Lumiketjut (18”, 20”)
[58.H] Muta-/talvipyörät (18”, 20”)
[58.I] Perävaunu
[58.J, 58.K] Levitin
[58.L] Nurmikkojyrä
[58.M] Lumiaura
[58.N] Etulakaisulaite
[58.O] Silppuri
[58.P] *(Vain malleille SD series)*
Lehtien ja ruohon kerääjä 38”
Lehtien ja ruohon kerääjä 42”
[58.Q] Etuharavalaite
[58.R1, 58.R2] Nostolaite + Voimanotto (PTO)
[58.R3] Voimanotto (PTO)

* Kyseinen tieto on katsottava koneen tunnistustarrasta.

[1] **FR - CARACTÉRISTIQUES TECHNIQUES**
[2] Puissance nominale *
[3] Tours par minute *
[4] Circuit électrique
[5] Capacité du réservoir de carburant
[6] Pneus avant
[7] Pneus arrière
[8] Pression de gonflage avant
[9] Pression de gonflage arrière
[10] Hauteur de tonte
[11] Largeur de tonte
[12] Rayon minimal de l'herbe non taillée
[13] Code organe de coupe
[14] Vitesse d'avancement (indicative) à 3 000 min-1
[15] Limite de vitesse avec chaînes à neige (si cet accessoire est prévu)
[16] Limite de charge pour dispositif de remorquage (Force verticale maximum)
[17] Limite de charge pour dispositif de remorquage (Poids maximum remorquable)
[18] Inclinaison maximum autorisée
[19] Dimensions
[20] Longueur
[21] Longueur avec sac (Longueur sans sac)
[22] Largeur
[23] Largeur avec déflecteur d'éjection latérale (Largeur sans déflecteur d'éjection latérale)
[24] Hauteur
[25] Masse de la machine avec réservoir vide *
[26] Niveau de pression sonore (max.)
[27] Incertitude de la mesure
[28] Niveau de puissance sonore mesuré (max.)
[29] Niveau de puissance sonore garanti
[30] Niveau de vibration au poste de conduite (max.)
[31] Niveau de vibration au volant (max.)
[32] Tableau pour la combinaison correcte des accessoires
[32.A] Accessoires arrière
[32.B] Accessoire frontaux
[58] Accessoires sur demande
[58.A1, 58.A2] Kit « mulching »
[58.B] Chargeur de maintien batterie
[58.C] Kit remorquage
[58.D] Housse de protection
[58.E] Kit poids arrière
[58.F] Kit de protection d'éjection arrière *(seulement pour les modèles avec ramassage arrière)*
[58.G] Chaînes à neige (18”, 20”)
[58.H] Roues boue / neige (18”, 20”)
[58.I] Remorque
[58.J, 58.K] Épandeur
[58.L] Rouleau pour herbe
[58.M] Chasse-neige à lame
[58.N] Balayeuse frontale
[58.O] Broyeur
[58.P] *(Seulement pour les modèles SD series)*
Balai de ramassage feuilles et herbe 38”
Balai de ramassage feuilles et herbe 42”
[58.Q] Râteau frontal
[58.R1, 58.R2] Interface de levage + Prise de puissance (PTO)
[58.R3] Prise de puissance (PTO)

* Pour les données spécifiques, se référer aux indications reportées sur l'étiquette d'identification de la machine.

[1] **HR - TEHNIČKI PODACI**
[2] Nominalna snaga *
[3] Okretaji u minuti *
[4] Električni sustav
[5] Kapacitet spremnika goriva
[6] Prednje gume
[7] Stražnje gume
[8] Tlak u prednjim gumama
[9] Tlak u stražnjim gumama
[10] Visina košnje
[11] Širina košnje
[12] Minimalni promjer nepokošene trave
[13] Šifra noževa
[14] Brzina kretanja (približna) na 3000 min-1
[15] Ograničenje brzine s lancima za snijeg (ako ta oprema postoji)
[16] Granično opterećenje uređaja za vuču (maksimalna vertikalna snaga)
[17] Granično opterećenje uređaja za vuču (maksimalna težina vuče)
[18] Najveći dozvoljeni nagib
[19] Dimenzije
[20] Duljina
[21] Duljina s košarom (Duljina bez košare)
[22] Širina
[23] Širina s usmjerivačem bočnog izbacivanja (Širina bez usmjerivača bočnog izbacivanja)
[24] Visina
[25] Masa stroja s praznim spremnikom *
[26] Razina zvučnog tlaka (max.)
[27] Kolebanje mjerenja
[28] Izmjerena razina zvučnog tlaka (max.)
[29] Zajamčena razina zvučnog tlaka
[30] Razina vibracija na mjestu vozača (max.)
[31] Razina vibracija na upravljaču (max.)
[32] Tablica za pravilnu kombinaciju dodatne opreme
[32.A] Stražnja dodatna oprema
[32.B] Prednja dodatna oprema
[58] Dodatna oprema na zahtjev
[58.A1, 58.A2] Komplet za “malčiranje”
[58.B] Punjač baterija za održavanje
[58.C] Komplet za vuču
[58.D] Zaštitna cerada
[58.E] Komplet stražnjih utega
[58.F] Komplet zaštite stražnjeg izbacivanja *(samo za modele sa stražnjim sakupljanjem)*
[58.G] Lanci za snijeg (18”, 20”)
[58.H] Kotači za blato/snijeg (18”, 20”)
[58.I] Prikolica
[58.J, 58.K] Rasipač
[58.L] Valjak za travu
[58.M] Nož za čišćenje snijega
[58.N] Prednja četka
[58.O] Priključak za košnju nekultivirane trave
[58.P] *(Samo za modele serije SD)*
Sakupljač lišća i trave 38”
Sakupljač lišća i trave 42”
[58.Q] Prednje grablje
[58.R1, 58.R2] Sučelje za podizanje + Priključno vratilo (PTO)
[58.R3] Priključno vratilo (PTO)

* Za točan podatak pogledajte što je navedeno na identifikacijskoj etiketi stroja.

[1] **HU - MŰSZAKI ADATOK**
[2] Névleges teljesítmény *
[3] Percenkénti fordulatszám *
[4] Elektromos rendszer
[5] Üzemanyagtartály kapacitása
[6] Első gumiabroncsok
[7] Hátsó gumiabroncsok
[8] Első guminyomás
[9] Hátsó guminyomás
[10] Vágási magasság
[11] Vágási szélesség
[12] Nem levágott fű minimális sugara
[13] Vágószerkezet kódja
[14] Haladási sebesség (hozzávetőleges) 3000 min-1-en
[15] Sebességkorlátozás hólánccal (ha van ilyen tartozék)
[16] Vontatószerkezet terhelési korlátozás (Maximális függőleges erő)
[17] Vontatószerkezet terhelési korlátozás (Maximális vontatható súly)
[18] Megengedett maximális dőlés
[19] Méretek
[20] Hossz
[21] Hossz zsákkal (Hossz zsák nélkül)
[22] Szélesség
[23] Szélesség oldalsó kihordó terelőlemezzel (Szélesség oldalsó kihordó terelőlemez nélkül)
[24] Magasság
[25] A gép tömege üres tartállyal *
[26] Hangnyomásszint (max.)
[27] Mérési bizonytalanság
[28] Mért hangerőszint (max.)
[29] Garantált hangerőszint
[30] Rezgésszint a vezetőülésnél (max.)
[31] Rezgésszint a kormánynál (max.)
[32] Táblázat a tartozékok helyes összerakásához
[32.A] Hátsó tartozékok
[32.B] Oldalsó tartozékok
[58] Igényelt tartozékok
[58.A1, 58.A2] Mulcsozó készlet
[58.B] Fenntartó akkumulátortöltő
[58.C] Vontatókészlet
[58.D] Takaróvászon
[58.E] Hátsó súlykészlet
[58.F] Hátsó kihordás védőelem készlet *(csak hátsó kihordású modelleknél)*
[58.G] Hólánc (18”, 20”)
[58.H] Sár-/hókerekek (18”, 20”)
[58.I] Utánfutó
[58.J, 58.K] Szóró
[58.L] Fűhenger
[58.M] Hótolólap
[58.N] Frontoldali kefe
[58.O] Aprító
[58.P] *(Csak az SD sorozat modelljeihez)*
Fű- és avargyűjtő 38”
Fű- és avargyűjtő 42”
[58.Q] Frontoldali gereblye
[58.R1, 58.R2] Emelő interfész + erőleadó (TLT)
[58.R3] Erőleadó (TLT)

* A specifikus adatokat a gép azonosító címkéjén találja.

[1] **LT – TECHNINIAI DUOMENYS**
[2] Vardinė galia *
[3] Apsisukimai per minutę *
[4] Elektros sistema
[5] Degalų bako talpa
[6] Priekinės padangos
[7] Galinės padangos
[8] Priekinių padangų slėgis
[9] Galinių padangų slėgis
[10] Pjovimo aukštis
[11] Pjovimo plotis
[12] Mažiausias nenupjautos žolės spindulys
[13] Pjovimo įrenginio kodas
[14] Padavimo greitis (apytikslis) 3 000 min-1
[15] Greičio apribojimas su sniego grandinėmis (jeigu numatytas priedas)
[16] Vilkimo įtaiso apkrovos riba (didžiausia vertikali jėga)
[17] Vilkimo įtaiso apkrovos riba (didžiausias vilkimo svoris)
[18] Didžiausias leistinas nuolydis
[19] Matmenys
[20] Ilgis
[21] Ilgis su maišu (ilgis be maišo)
[22] Plotis
[23] Plotis su šoniniu išmetimo deflektoriumi (plotis be šoninio išmetimo deflektoriaus)
[24] Aukštis
[25] Mašinos svoris, kai bakas tuščias*
[26] Garso slėgio lygis (didž.)
[27] Matavimo netikslumas
[28] Išmatuotas garso galios lygis (didž.)
[29] Garantuotas garso galios lygis
[30] Vairuotojo sėdynės vibracijos lygis (didž.)
[31] Vibracijos lygis prie vairo (didž.)
[32] Teisingos priedų kombinacijos lentelė
[32.A] Galiniai priedai
[32.B] Priekiniai priedai
[58] Papildomi priedai
[58.A1, 58.A2] Mulčiavimo komplektas
[58.B] Akumuliatoriaus palaikymo įkroviklis
[58.C] Vilkimo komplektas
[58.D] Brezentas
[58.E] Galinių svarsčių komplektas
[58.F] Galinio išmetimo apsaugos komplektas *(tik modeliams su galiniu surinkimu)*
[58.G] Sniego grandinės (18”, 20”)
[58.H] Ratai purvui / sniegui (18”, 20”)
[58.I] Priekaba
[58.J, 58.K] Barstytuvas
[58.L] Volas žolei
[58.M] Peilinis sniego valytuvas
[58.N] Šlavimo mašina su priekine šluota
[58.O] Smulkintuvas
[58.P] *(Tik SD serijos modeliams)*
Lapų ir žolės surinkėjas 38”
Lapų ir žolės surinkėjas 42”
[58.Q] Priekinis gręblys
[58.R1, 58.R2] Kėlimo sistema + Galios teikimo velenas (GTV)
[58.R3] Galios teikimo velenas (GTV)

* Dėl konkrečių duomenų žiūrėti, kas nurodyta įrenginio identifikavimo etiketėje.

[1] **LV - TEHNISKIE DATI**
[2] Nominālā jauda *
[3] Apgriezieni minūtē *
[4] Elektriskā iekārta
[5] Degvielas tvertnes tilpums
[6] Priekšējās riepas
[7] Aizmugurējās riepas
[8] Priekšējais gaisa spiediens
[9] Aizmugurējais gaisa spiediens
[10] Griešanas augstuma regulēšana
[11] Griešanas platuma regulēšana
[12] Minimālais nenopļautās zāles rādiuss
[13] Griešanas mehānisma kods
[14] Pārvietošanās ātrums (aptuvens) 3000 min.-1
[15] Ātruma ierobežojums ar sniega ķēdēm (ja piederums ir paredzēts)
[16] Griešanas mehānisma maksimālā nestspēja (maksimālais vertikālais spēks)
[17] Griešanas mehānisma maksimālā nestspēja (maksimālais buksēšanas svars)
[18] Maksimālais pieļaujamais slīpums
[19] Izmēri
[20] Garums
[21] Garums ar maisu (garums bez maisa)
[22] Platums
[23] Platums ar sāniskās izmešanas deflektoru (platums bez sāniskās izmešanas deflektora)
[24] Augstums
[25] Mašīnas masa ar tukšu tvertni *
[26] Maksimālais spiediena līmenis (maks.)
[27] Mērījuma kļūda
[28] Maksimālais izmērītais skaņas spiediena līmenis (maks.)
[29] Garantētais skaņas spiediena līmenis
[30] Vibrāciju līmenis vadītāja vietā (maks.)
[31] Vibrāciju līmenis pie stūres (maks.)
[32] Tabula pareizai piederumu savienošanai
[32.A] Aizmugurējie piederumi
[32.B] Priekšējie piederumi
[58] Piederumi pēc pieprasījuma
[58.A1, 58.A2] “Mulčēšanas” komplekts
[58.B] Akumulatora uzturēšanas lādēšana
[58.C] Vilkšanas komplekts
[58.D] Pārvalks
[58.E] Aizmugurējo svaru komplekts
[58.F] Aizmugurējās izmešanas aizsargkomplekts *(tikai modeļiem ar aizmugurējo savākšanu)*
[58.G] Sniega ķēdes (18”, 20”)
[58.H] Dubļu/sniega riteņi (18”, 20”)
[58.I] Piekabe
[58.J, 58.K] Izkliedētājs
[58.L] Zāles rullis
[58.M] Sniega tīrītājs ar vērstuvi
[58.N] Priekšpusē novietots slaucītājs
[58.O] Smalcināšanas iekārta
[58.P] *(Tikai SD sērijas modeļiem)*
Lapu un zāles savācējs 38”
Lapu un zāles savācējs 42”
[58.Q] Priekšējais grābeklis
[58.R1, 58.R2] Pacelšanas kontaktvirsma + Jaudas noņemšana (PTO)
[58.R3] Jaudas noņemšana (PTO)

* Attiecībā uz šo konkrēto informāciju, atsaukties uz to, kas norādīta uz ierīces identifikācijas marķējuma.

[1] **МК - ТЕХНИЧКИ ПОДАТОЦИ**
[2] Номинална моќност *
[3] Вртежи во минута *
[4] Електричен систем
[5] Капацитет на резервоарот за гориво
[6] Предни гуми
[7] Задни гуми
[8] Притисок во предните гуми
[9] Притисок во задните гуми
[10] Висина на косење
[11] Ширина на косење
[12] Минимален радиус на некосена трева
[13] Сечило дел бр.
[14] Предна брзина (индикативна) на 3000 мин-1
[15] Ограничување на брзината со ланци за снег (доколку има)
[16] Ограничување на оптоварувањето за уредот за влечење (Максимална вертикална сила)
[17] Ограничување на оптоварувањето за уредот за влечење (Дозволена тежина на влечење)
[18] Максимална дозволена косина
[19] Димензии
[20] Должина
[21] Должина со корпа за трева (Должина без корпа за трева)
[22] Ширина
[23] Ширина со дефлектор за странично исфрлање (Ширина без дефлектор за странично исфрлање)
[24] Тежина
[25] Тежина на машината со празен резервоар *
[26] Ниво на звучен притисок (макс.)
[27] Мерна несигурност
[28] Ниво на измерена звучна моќност (макс.)
[29] Ниво на загарантирана звучна моќност
[30] Ниво на вибрација на местото на возачот (макс.)
[31] Ниво на вибрација на управувачот (макс.)
[32] Табела за компатибилност на дополнителна опрема
[32.A] Задна дополнителна опрема
[32.B] Предна дополнителна опрема
[58] Опционална дополнителна опрема
[58.A1, 58.A2] Сет за „мулчирање“
[58.B] Полнач за одржување на наполнетоста на акумулаторот
[58.C] Сет за влечење
[58.D] Заштитно платно
[58.E] Сет за задна корпа за товар
[58.F] Сет за безбедност за задно исфрлање *(само за модели со задна корпа за трева)*
[58.G] Ланци за снег (18”, 20”)
[58.H] Гуми за снег/кал (18”, 20”)
[58.I] Приколка
[58.J, 58.K] Прскалка
[58.L] Валјак за трева
[58.M] Сечиво за снег
[58.N] Преден чистач
[58.O] Шредер
[58.P] *(Само за модели со SD серија)*
Собирач на лисја 38”
Собирач на лисја 42”
[58.Q] Предно гребло
[58.R1, 58.R2] Подигнувачка платформа + Капацитет на подигање (PTO)
[58.R3] Капацитет на подигање (PTO)

* За повеќе информации погледнете ја ознаката за идентификација на машината.

[1] **NL - TECHNISCHE GEGEVENS**
[2] Nominaal vermogen *
[3] Toeren per minuut *
[4] Elektrische installatie
[5] Vermogen brandstofreservoir
[6] Voorbanden
[7] Achterbanden
[8] Bandenspanning vooraan
[9] Bandenspanning achteraan
[10] Maaihoogte
[11] Maaibreedte
[12] Minimum straal ongemaaid gras
[13] Code snijgroep
[14] Voortbewegingssnelheid (indicatief) bij 3000 min-1
[15] Snelheidslimiet met sneeuwkettingen (indien voorzien accessoire)
[16] Laadlimiet voor aandrijfinrichting (Maximale verticale kracht)
[17] Laadlimiet voor aandrijfinrichting (Trekbaar maximaal gewicht)
[18] Toegestane maximum inclinatie
[19] Afmetingen
[20] Lengte
[21] Lengte met zak (Lengte zonder zak)
[22] Breedte
[23] Breedte met zijdelingse aflaatdeflector (Breedte zonder zijdelingse aflaatdeflector)
[24] Hoogte
[25] Massa van de machine met lege tank *
[26] Geluidsdrukniveau (max.)
[27] Meetonzekerheid
[28] Gemeten geluidsdrukniveau (max.)
[29] Gegarandeerd geluidsvermogenniveau
[30] Trillingsniveau op de bestuurdersplaats (max.)
[31] Trillingsniveau op het stuur (max.)
[32] Tabel voor de correcte combinatie van de accessoires
[32.A] Accessoires achteraan
[32.B] Frontale accessoires
[58] Accessoires op verzoek
[58.A1, 58.A2] Kit “Melching”
[58.B] Batterijlader voor behoud
[58.C] Trekset
[58.Do] Afdekzeil
[58.E] Set gewichten achteraan
[58.F] Beschermingskit aflaat achteraan *(enkel voor modellen met opvang achteraan)*
[58.G] Sneeuwkettingen (18”, 20”)
[58.H] Modderwielen/sneeuwwielen (18”, 20”)
[58.I] Aanhanger
[58.J, 58.K] Verspreider
[58.L] Rol voor gras
[58.M] Sneeuwruimer met sneeuwschuif
[58.N] Frontale veger
[58.O] Hakselaar
[58.P] *(Enkel voor modellen SD series)*
Opvanger voor bladeren en gras 38”
Opvanger voor bladeren en gras 42”
[58.Q] Frontale hark
[58.R1, 58.R2] Lift-interface + Aftakas (PTO)
[58.R3] Aftakas (PTO)

* Voor het specifieke gegeven wordt verwezen naar wat is aangeduid op het identificerende etiket van de machine.

[1] **NO - TEKNISKE DATA**
[2] Nominell effekt *
[3] Omdreininger per minutt *
[4] Elektrisk anlegg
[5] Drivstofftankens kapasitet
[6] Dekk framme
[7] Dekk bak
[8] Trykk ved oppblåsing framme
[9] Trykk ved oppblåsing bak
[10] Klippehøyde
[11] Klippebredde
[12] Minste radius til ikke klippet gress
[13] Kode til klippeenheten
[14] Hastighet ved framdrift (veiledende) ved 3000 min-1
[15] Hastighetsbegrensning med snøkjetting (dersom dette tilbehøret forutsettes)
[16] Lastbegrensning for trekkanordningen (Maksimal vertikal effekt)
[17] Lastbegrensning for trekkanordningen (Maksimal vekt som kan taues)
[18] Maksimal tillatt helning
[19] Dimensjoner
[20] Lengde
[21] Lengde med sekk (Lengde uten sekk)
[22] Bredde
[23] Bredde med deflektor for tømming på siden (Bredde uten deflektor for tømming på siden)
[24] Høyde
[25] Maskinvekt med tom tank*
[26] Lydtrykknivå (maks.)
[27] Måleusikkerhet
[28] Målt lydeffektnivå (maks.)
[29] Garantert lydeffektnivå
[30] Nivå for vibrasjoner ved sjåførens sete (maks.)
[31] Nivå for vibrasjoner ved rattet (maks.)
[32] Tabell for riktig kombinasjon av tilbehør
[32.A] Tilbehør bak
[32.B] Tilbehør framme
[58] Ekstrautstyr etter forespørsel
[58.A1, 58.A2] Sett for “mulching”
[58.B] Batterilader for opprettholdelse
[58.C] Sett for trekking
[58.D] Presenning for tildekking
[58.E] Sett for vekter framme
[58.F] Sett for beskyttelse av utslipp bak *(kun for modellene med oppsamling bak)*
[58.G] Snøkjetting (18”, 20”)
[58.H] Dekk for gjørme/snø (18”, 20”)
[58.I] Tilhenger
[58.J, 58.K] Spreder
[58.L] Plenrull
[58.M] Snøplog med skjær
[58.N] Feiemaskin med koster framme
[58.O] Kutter
[58.P] *(Kun for modellene i SD seriene)*
Oppsamler av blader og gress 38”
Oppsamler av blader og gress 42”
[58.Q] Rake framme
[58.R1, 58.R2] Grensesnitt for løfting + Kraftuttak (PTO)
[58.R3] Kraftuttak (PTO)

* For den spesifikke dataen, se hva som er angitt på etiketten for identifikasjon av maskinen.

[1] **PL - DANE TECHNICZNE**
[2] Moc znamionowa *
[3] Obroty na minutę *
[4] Instalacja elektryczna
[5] Pojemność zbiornika paliwa
[6] Opony przednie
[7] Opony tylne
[8] Ciśnienie przednich opon
[9] Ciśnienie tylnych opon
[10] Wysokość koszenia
[11] Szerokość koszenia
[12] Minimalny promień nieskoszonej trawy
[13] Kod urządzenia tnącego
[14] Prędkość jazdy (orientacyjna) przy 3000 min-1
[15] Limit prędkości z łańcuchami śniegowymi (jeśli przewidziano)
[16] Limit obciążenia dla urządzenia holowniczego (maksymalna siła pionowa)
[17] Limit obciążenia dla urządzenia holowniczego (maksymalna masa przyczepy)
[18] Maksymalne dozwolone nachylenie
[19] Wymiary
[20] Długość
[21] Długość z pojemnikiem (długość bez pojemnika)
[22] Szerokość
[23] Szerokość z deflektorem bocznego wyrzutu (szerokość bez deflektora bocznego wyrzutu)
[24] Wysokość
[25] Waga urządzenia z pustym zbiornikiem paliwa *
[26] Poziom ciśnienia akustycznego (maks.)
[27] Błąd pomiaru
[28] Zmierzony poziom mocy akustycznej (maks.)
[29] Gwarantowany poziom mocy akustycznej
[30] Poziom drgań na miejscu kierowcy (maks.)
[31] Poziom drgań na kierownicy (maks.)
[32] Tabela prawidłowego połączenia akcesoriów
[32.A] Akcesoria tylne
[32.B] Akcesoria przednie
[58] Akcesoria na zamówienie
[58.A1, 58.A2] Zestaw „mulching”
[58.B] Ładowarka akumulatora
[58.C] Zestaw do holowania
[58.D] Pokrowiec
[58.E] Zestaw tylnych obciążników
[58.F] Zestaw osłony tylnego wyrzutu trawy *(tylko do modeli z tylnym pojemnikiem na trawę)*
[58.G] Łańcuchy śniegowe (18”, 20”)
[58.H] Koła błotne/śnieżne (18”, 20”)
[58.I] Przyczepa
[58.J, 58.K] Rozrzutnik
[58.L] Walec do trawy
[58.M] Pług śnieżny
[58.N] Przednia zamiatarka
[58.O] Rozdrabniacz
[58.P] *(Tylko do modeli SD series)*
Zbieracz do liści i trawy 38”
Zbieracz do liści i trawy 42”
[58.Q] Przednia zgrabiarka
[58.R1, 58.R2] Interfejs podnoszenia + Przystawka odbioru mocy (PTO)
[58.R3] Przystawka odbioru mocy (PTO)

* Aby uzyskać szczegółowe dane, odnieść się do informacji wskazanych na etykiecie identyfikacyjnej maszyny.

[1] **PT - DADOS TÉCNICOS**
[2] Potência nominal *
[3] Rotações por minuto *
[4] Sistema elétrico
[5] Capacidade do tanque de combustível
[6] Pneus dianteiros
[7] Pneus traseiros
[8] Pressão de enchimento dianteiro
[9] Pressão de enchimento traseiro
[10] Altura de corte
[11] Largura de corte
[12] Raio mínimo da relva não cortada
[13] Código do dispositivo de corte
[14] Velocidade de avanço (indicativa) a 3000 min-1
[15] Limite de velocidade com correntes de neve (se o acessório estiver incluído)
[16] Limite de carga para dispositivo de tração (Força vertical máxima)
[17] Limite de carga para dispositivo de tração (Peso máximo rebocável)
[18] Inclinação máxima permitida
[19] Dimensões
[20] Comprimento
[21] Comprimento com saco (Comprimento sem saco)
[22] Largura
[23] Largura com defletor de descarga lateral (Largura sem defletor de descarga lateral)
[24] Altura
[25] Massa da máquina com reservatório vazio *
[26] Nível de pressão acústica (máx.)
[27] Incerteza de medição
[28] Nível de potência acústica medido (máx.)
[29] Nível de potência acústica garantido
[30] Nível de vibrações no posto de condução (máx.)
[31] Nível de vibrações no volante (máx.)
[32] Tabela para a combinação correta dos acessórios
[32.A] Acessórios traseiros
[32.B] Acessórios dianteiros
[58] Acessórios a pedido
[58.A1, 58.A2] Kit “mulching”
[58.B] Carregador de bateria de manutenção
[58.C] Kit de tração
[58.D] Lona de cobertura
[58.E] Kit de pesos traseiros
[58.F] Kit de proteção de descarga traseira *(apenas para os modelos com recolha traseira)*
[58.G] Correntes de neve (18”, 20”)
[58.H] Rodas para lama/neve (18”, 20”)
[58.I] Reboque
[58.J, 58.K] Distribuidor
[58.L] Rolo para relva
[58.M] Limpa-neves com lâmina
[58.N] Pá frontal
[58.O] Retalhadora
[58.P] *(apenas para os modelos SD series)*
Recolhedor de folhas e relva 38”
Recolhedor de folhas e relva 42”
[58.Q] Grade frontal
[58.R1, 58.R2] Interface de elevação + Tomada de força (TDF)
[58.R3] Tomada de força (TDF)

* Para este dado, consulte a indicação na etiqueta de identificação da máquina.

[1] **RO - DATE TEHNICE**
[2] Putere nominală *
[3] Rotații pe minut *
[4] Instalație electrică
[5] Capacitatea rezervorului de carburant
[6] Anvelope față
[7] Anvelope spate
[8] Presiunea de umflare față
[9] Presiunea de umflare spate
[10] Înălțimea de tăiere
[11] Lățimea de tăiere
[12] Raza minimă de iarbă netăiată
[13] Codul dispozitivului de tăiere
[14] Viteza de înaintare (orientativă) la 3000 min-1
[15] Limita de viteză cu lanțuri de zăpadă (dacă acest accesoriu există în dotare)
[16] Limita de sarcină pentru dispozitivul de tractare (Forța verticală maximă)
[17] Limita de sarcină pentru dispozitivul de tractare (Masă remorcabilă maximă)
[18] Înclinarea maximă admisă
[19] Dimensiuni
[20] Lungime
[21] Lungime cu sac (Lungime fără sac)
[22] Lățime
[23] Lățime cu deflector de evacuare lateral (Lățime fără deflector de evacuare lateral)
[24] Înălțime
[25] Greutatea mașinii cu rezervorul gol *
[22] Nivelul de presiune sonoră (max.)
[27] Nesiguranță în măsurare
[28] Nivelul de putere acustică măsurat (max.)
[29] Nivelul de putere acustică garantat
[30] Nivelul de vibrații pe locul șoferului (max.)
[31] Nivelul de vibrații pe volan (max.)
[32] Tabel pentru combinarea corectă a accesoriilor
[32.A] Accesorii posterioare
[32.B] Accesorii frontale
[58] Accesorii la cerere
[58.A1, 58.A2] Kit pentru mulci
[58.B] Încărcător baterii pentru întreținere
[58.C] Kit tractare
[58.D] Prelată de acoperire
[58.E] Kit greutăți posterioare
[58.F] Kit de protecție pentru evacuare posterioară *(doar pentru modelele cu sistem de colectare în spate)*
[58.G] Lanțuri de zăpadă (18”, 20”)
[58.H] Roți de noroi / iarnă (18”, 20”)
[58.I] Remorcă
[58.J, 58.K] Dispozitiv de împrăștiere
[58.L] Cilindru pentru iarbă
[58.M] Utilaj de deszăpezire cu lamă
[58.N] Măturător frontal
[58.O] Tocător
[58.P] *(Numai pentru modelele din seria SD)*
Colector de frunze și iarbă 38”
Colector de frunze și iarbă 42”
[58.Q] Greblă frontală
[58.R1, 58.R2] Interfață de ridicare+ Priză de putere (PTO)
[58.R3] Priză de putere (PTO)

* Pentru date specifice, consultați informațiile de pe eticheta de identificare a mașinii.

[1] **RU - ТЕХНИЧЕСКИЕ ХАРАКТЕРИСТИКИ**
[2] Номинальная мощность *
[3] Частота вращения *
[4] Электрическая система
[5] Объем топливного бака
[6] Передние шины
[7] Задние шины
[8] Давление в передних шинах
[9] Давление в задних шинах
[10] Высота скашивания
[11] Ширина скашивания
[12] Минимальный радиус нескошенной травы
[13] Артикул режущего приспособления
[14] Скорость движения (примерная) на 3000 об/мин
[15] Предельная скорость с цепями противоскольжения (если предусмотрены)
[16] Предельная нагрузка на буксировочное устройство (Максимальная вертикальная сила)
[17] Предельная нагрузка на буксировочное устройство (Максимальный буксируемый вес)
[18] Максимально допустимый наклон
[19] Габариты
[20] Длина
[21] Длина с травосборником (Длина без травосборника)
[22] Ширина
[23] Ширина с дефлектором бокового выброса (Ширина без дефлектора бокового выброса)
[24] Высота
[25] Вес изделия без топлива *
[26] Уровень звукового давления (макс.)
[27] Неточность размеров
[28] Измеренный уровень звуковой мощности (макс.)
[29] Гарантированный уровень звуковой мощности
[30] Уровень вибраций на месте оператора (макс.)
[31] Уровень вибраций на руле (макс.)
[32] Таблица совместимости дополнительных принадлежностей
[32.A] Задние принадлежности
[32.B] Передние принадлежности
[58] Опциональные принадлежности
[58.A1, 58.A2] Комплект для мульчирования
[58.B] Поддерживающее зарядное устройство
[58.C] Комплект для буксировки
[58.D] Укрывной брезент
[58.E] Комплект заднего балласта
[58.F] Комплект ограждения заднего выброса *(только для моделей с задним сбором)*
[58.G] Цепи противоскольжения (18", 20")
[58.H] Грязевые / снеговые колеса (18", 20")
[58.I] Прицеп
[58.J, 58.K] Разбрасыватель
[58.L] Садовый каток
[58.M] Шнекороторный снегоочиститель
[58.N] Фронтальная щетка
[58.O] Измельчитель
[58.P] *(только для моделей серии SD)*
Сборщик травы и листьев 38"
Сборщик травы и листьев 42"
[58.Q] Фронтальные грабли
[58.R1, 58.R2] Подъемный адаптер + отбор мощности (МОМ)
[58.R3] отбор мощности (МОМ)

* Для получения конкретных значений обращайтесь к идентификационной табличке машины.

[1] **SK – TECHNICKÉ PARAMETRE**
[2] Nominálny výkon
[3] Otáčky za minútu
[4] Elektroinštalácia
[5] Kapacita palivovej nádrže
[6] Predné pneumatiky
[7] Zadné pneumatiky
[8] Tlak nahustenia predných pneumatík
[9] Tlak nahustenia zadných pneumatík
[10] Výška kosenia
[11] Šírka kosenia
[12] Minimálny akčný rádius otáčania
[13] Kód kosiaceho zariadenia
[14] Rýchlosť jazdy (indikatívna) pri ot. 3 000 min-1
[15] Rýchlostný limit so snehovými reťazami (ak sú súčasťou príslušenstva
[16] Limit nákladu pre ťažné zariadenie (maximálne vertikálne zaťaženie
[17] Limit nákladu pre ťažné zariadenie (maximálna hmotnosť pre ťahanie
[18] Maximálny povolený náklon
[19] Rozmery
[20] Dĺžka
[21] Dĺžka s košom (dĺžka bez koša)
[22] Šírka
[23] Šírka s vychyľovačom bočného vyhadzovania (šírka bez vychyľovača bočného vyhadzovania
[24] Výška
[25] Hmotnosť stroja s prázdnou nádržou
[26] Úroveň akustického tlaku
[27] Nepresnosť merania
[28] Meraná úroveň akustického výkonu
[29] Garantovaná úroveň akustického výkonu
[30] Úroveň vibrácií na mieste vodiča
[31] Úroveň vibrácií pri volante
[32] Tabuľka pre správne kombinácie príslušenstva
[32.A] Zadné príslušenstvo
[32.B] Čelné príslušenstvo
[58] Príslušenstvo na požiadanie
[58.A1, 58.A2] Súprava „mulčovanie"
[58.B] Udržiavacia nabíjačka akumulátora
[58.C] Súprava ťažného zariadenia
[58.D] Krycia plachta
[58.E] Súprava zadných závaží
[58.F] Ochranná súprava zadného vyhadzovania *(len pri modeloch so zadným zberom)*
[58.G] Snehové reťaze (18", 20")
[58.H] Kolesá do blata / snehu (18", 20")
[58.I] Prívesný vozík
[58.J, 58.K] Posypávač
[58.L] Valec na valcovanie trávy
[58.M] Snehová radlica
[58.N] Čelný zametač
[58.O] Drvička
[58.P] *(Iba pri modeloch SD series)*
Zberač lístia a trávy 38"
Zberač lístia a trávy 42"
[58.Q] Čelný hrabač
[58.R1, 58.R2] Prepojenie na zdvih + pohon prídavného zariadenia (PTO)
[58.R3] Pohon prídavného zariadenia (PTO)

* Pri špecifických údajoch sa riaďte údajmi uvedenými na identifikačných štítkoch stroja.

[1] **SL - TEHNIČNI PODATKI**
[2] Nazivna moč*
[3] Vrtljaji na minuto*
[4] Električna napeljava
[5] Prostornina rezervoarja za gorivo
[6] Sprednje pnevmatike
[7] Zadnje pnevmatike
[8] Polnilni tlak sprednjih pnevmatik
[9] Polnilni tlak zadnjih pnevmatik
[10] Višina košnje
[11] Širina košnje
[12] Najmanjše področje nepokošene trave
[13] Šifra rezalne naprave
[14] Hitrost vožnje (nazivna) pri 3000 min-1
[15] Omejitev hitrosti pri uporabi snežnih verig (če je oprema predvidena)
[16] Omejitev obremenitve za vlečno napravo (največja navpična sila)
[17] Omejitev obremenitve za vlečno napravo (največja dovoljena vlečena masa)
[18] Največji dovoljeni naklon
[19] Dimenzije
[20] Dolžina
[21] Dolžina s košaro (dolžina brez košare)
[22] Širina
[23] Širina z odbijačem bočnega izmeta (širina brez odbijača bočnega izmeta)
[24] Višina
[25] Teža stroja s praznim rezervoarjem*
[26] Raven zvočnega tlaka (najv.)
[27] Nezanesljivost meritve
[28] Raven izmerjene jakosti zvoka (najv.)
[29] Raven zajamčene jakosti zvoka
[30] Raven vibracij na voznikovem sedežu (najv.)
[31] Raven vibracij na volanu (najv.)
[32] Preglednica za pravilno kombiniranje dodatne opreme
[32.A] Zadnja dodatna oprema
[32.B] Sprednja dodatna oprema
[58] Dodatna oprema po naročilu
[58.A1, 58.A2] Komplet za „mulčenje"
[58.B] Polnilnik akumulatorja za vzdrževanje
[58.C] Komplet za vleko
[58.D] Prekrivno platno
[58.E] Komplet zadnjih uteži
[58.F] Komplet za zaščito zadnjega izmeta *(samo za modele z zbiralnikom na zadnjem delu)*
[58.G] Snežne verige (18", 20")
[58.H] Kolesa za blato / sneg (18", 20")
[58.I] Prikolica
[58.J, 58.K] Trosilec
[58.L] Valj za travo
[58.M] Snežni plug z nožem
[58.N] Sprednja naprava za pometanje
[58.O] Mulčer
[58.P] *(Samo za modele serije SD)*
Pobiralnik listja in trave 38"
Pobiralnik listja in trave 42"
[58.Q] Sprednje grablje
[58.R1, 58.R2] Vmesnik za dviganje + odjem moči (PTO)
[58.R3] Odjem moči (PTO)

* Za specifične podatke si oglejte navedbe na Identifikacijski etiketi stroja.

[1] **SR – TEHNIČKI PODACI**
[2] Nominalna snaga *
[3] Obrtaja u minutu *
[4] Električni uređaj
[5] Kapacitet rezervoara za gorivo
[6] Prednji pneumatici
[7] Zadnji pneumatici
[8] Pritisak naduvanosti za prednje
[9] Pritisak naduvanosti za zadnje
[10] Visina otkosa
[11] Širina otkosa
[12] Minimalni poluprečnik nepokošene trave
[13] Kôd rezne glave
[14] Brzina napredovanja (indikativna) pri 3000 min-1
[15] Ograničenje brzine sa lancima za sneg (ako je dodatak predviđen)
[16] Ograničenje opterećenja prema sistemu za vuču (maksimalna vertikalna sila)
[17] Ograničenje opterećenja prema sistemu za vuču (maksimalna težina prikolice)
[18] Maksimalni dozvoljeni nagib
[19] Dimenzije
[20] Dužina
[21] Dužina sa vrećom (dužina bez vreće)
[22] Širina
[23] Širina sa usmerivačem bočnog izbacivanja (širina bez usmerivača bočnog izbacivanja)
[24] Visina
[25] Masa mašine sa praznim rezervoarom*
[26] Nivo akustičnog pritiska (maks.)
[27] Nepouzdanost merenja
[28] Izmereni nivo akustične snage (maks.)
[29] Garantovani nivo akustične snage
[30] Nivo vibracija na mestu vozača (maks.)
[31] Nivo vibracija na volanu (maks.)
[32] Tabela za ispravnu kombinaciju dodataka
[32.A] Dodaci za zadnji deo
[32.B] Dodaci za prednji deo
[58] Dodaci na zahtev
[58.A1, 58.A2] Oprema za malč
[58.B] Punjač akumulatora za održavanje
[58.C] Oprema za vuču
[58.D] Pokrovna cerada
[58.E] Oprema za teret na zadnjoj strani
[58.F] Oprema za zaštitu istovara otpozadi*(samo za modele sa skupljanjem otpozadi)*
[58.G] Lanci za sneg (18”, 20”)
[58.H] Točkovi za blato/sneg (18”, 20”)
[58.I] Prikolica
[58.J, 58.K] Posipač
[58.L] Valjak za travu
[58.M] Plug za sneg s nožem
[58.N] Deo za čišćenje sa prednje strane
[58.O] Kosačica
[58.P] *(Samo za modele iz serije SD)*
Skupljač lišća i trave 38”
Skupljač lišća i trave 42”
[58.Q] Prednje grabulje
[58.R1, 58.R2] Priključak za podizanje + Priključno vratilo (PTO)
[58.R3] Priključno vratilo (PTO)

* Za navedene podatke, pogledati identifikacionu etiketu mašine.

[1] **SV - TEKNISKA SPECIFIKATIONER**
[2] Nominell effekt *
[3] Varv per minut *
[4] Elsystem
[5] Bränsletankens kapacitet
[6] Främre däck
[7] Bakre däck
[8] Främre däcktryck
[9] Bakre däcktryck
[10] Klipphöjd
[11] Klippbredd
[12] Minimiradie på oklippt gräs
[13] Klippredskapets kod
[14] Körhastighet (ungefärlig) vid 3000 min-1
[15] Hastighetsgräns med snökedjor (om tillbehöret förutses)
[16] Belastningsgräns för bogseranordning (maximal vertikal kraft)
[17] Belastningsgräns för bogseranordning (maximal bogserbar vikt)
[18] Maximal tillåten lutning
[19] Dimensioner
[22] Längd
[21] Längd med påse (Längd utan påse)
[22] Bredd
[23] Bredd med sidotömningens riktplatta (Bredd utan sidotömningens riktplatta)
[24] Höjd
[25] Maskinvikt med tom tank*
[26] Ljudtrycksnivå (max)
[27] Tvivel med mått
[28] Ljudeffektsnivå (max)
[29] Garanterad ljudeffektsnivå
[30] Vibrationsnivå på förarplatsen (max)
[31] Vibrationsnivå vid ratten (max)
[32] Tabell för korrekt kombination av tillbehören
[32.A] Bakre tillbehör
[32.B] Främre tillbehör
[58] Tillbehör på begäran
[58.A1, 58.A2] Sats för "mulching"
[58.B] Underhållsladdning av batteriet
[58.C] Bogsersats
[58.D] Presenning
[58.E] Bakre viktsats
[58.F] Sats för bakre tömningsskydd *(bara för modeller med bakre uppsamling)*
[58.G] Snökedjor (18”, 20”)
[58.H] Hjul för lera/snö (18”, 20”)
[58.I] Släp
[58.J, 58.K] Spridare
[58.L] Gräsrulle
[58.M] Snöröjare med blad
[58.N] Främre sopmaskin
[58.O] Slaghack
[58.P] *(Bara för modeller i SD-serien)*
Blad- och grässamlare 38”
Blad- och grässamlare 42”
[58.Q] Främre kratta
[58.R1, 58.R2] Lyftkoppling + Kraftuttag (PTO)
[58.R3] Kraftuttag (PTO)

* För specifik uppgift, se anvisningar på maskinens märkskylt.

[1] **TR - TEKNİK VERİLER**
[2] Nominal güç *
[3] Dakikada devir *
[4] Elektrik sistemi
[5] Yakıt deposunun kapasitesi
[6] Ön lastikler
[7] Arka lastikler
[8] Ön lastik basıncı
[9] Arka lastik basıncı
[10] Kesim yüksekliği
[11] Kesim genişliği
[12] Minimum kesilmemiş çim yarıçapı
[13] Kesim cihazı parça n.
[14] 3000 dak-1'deki ileri hız (gösterge niteliğinde)
[15] Kar zincirleriyle birlikte hız sınırı (varsa)
[16] Yedekte çekme cihazı için yükleme sınırı (Maksimum dikey kuvvet)
[17] Yedekte çekme cihazı için yükleme sınırı (İzin verilebilir yedekte çekme ağırlığı)
[18] İzin verilebilir maksimum eğim
[19] Ebatlar
[20] Uzunluk
[21] Toplama haznesi torbasıyla birlikte uzunluk (Toplama haznesi torbası olmaksızın uzunluk)
[22] Genişlik
[23] Yanal döküm deflektörüyle birlikte genişlik (Yanal döküm deflektörü olmaksızın genişlik)
[24] Yükseklik
[25] Tank boşken makinenin ağırlığı*
[26] Ses basıncı seviyesi (maks.)
[27] Ölçü belirsizliği
[28] Ölçülen ses gücü seviyesi (maks.)
[29] Garanti edilen ses gücü seviyesi
[30] Sürüş mahallindeki titreşim seviyesi (maks.)
[31] Direksiyon simidindeki titreşim seviyesi (maks.)
[32] Aksesuar uyumluluk tablosu
[32.A] Arka aksesuarlar
[32.B] Ön aksesuarlar
[58] İsteğe bağlı aksesuarlar
[58.A1, 58.A2] "Malçlama" kiti
[58.B] Akü tampon şarj cihazı
[58.C] Yedekte çekme kiti
[58.D] Branda bezinden koruyucu örtü
[58.E] Arka ağırlıklar kiti
[58.F] Arka döküm güvenlik kiti *(yalnızca arka çim toplama haznesine sahip modeller)*
[58.G] Kar zincirleri (18”, 20”)
[58.H] Kar/çamur tekerlekleri (18”, 20”)
[58.I] Römork
[58.J, 58.K] Serpici
[58.L] Çim silindiri
[58.M] Bıçaklı kar küreme makinesi
[58.N] Ön süpürücü
[58.O] Kıyıcı
[58.P] *(Yalnızca SD serisi modeller için)*
Yaprak ve toplayıcı 38”
Yaprak ve toplayıcı 42”
[58.Q] Ön tırmık
[58.R1, 58.R2] Kaldırma arayüzü + Ara Şanzıman (PTO)
[58.R3] Ara Şanzıman (PTO)

* Özel bilgiler için, makine kimlik etiketindeki bilgilere başvurun.

EN

WARNING!: READ THE INSTRUCTION BOOKLET THOROUGHLY BEFORE USING THE MACHINE. Keep for future reference.

INDEX

1. GENERAL INFORMATION 2
2. SAFETY REGULATIONS 2
3. GETTING TO KNOW THE MACHINE 5
   3.1 Description of the machine and planned use 5
   3.2 Safety signs 5
   3.3 Identification label 6
   3.4 Main components 6
4. ASSEMBLY 7
   4.1 Assembly components 7
   4.2 Steering wheel assembly 7
   4.3 Seat assembly 8
   4.4 Mounting and connecting the battery 8
   4.5 Mounting the grass catcher supports 8
   4.6 Removing the grass catcher retaining pawl 8
   4.7 Mounting the rear bumper 8
   4.8 Mounting the grass catcher bag 8
   4.9 Mounting the grass catcher tipping levers 9
   4.10 Mounting the side guards of the cutting device assembly (if any) 9
   4.11 Side discharge chute assembly (for models with side discharge only) 9
5. CONTROLS 9
   5.1 Brake pedal 9
   5.2 Forward gear pedal 9
   5.3 Reverse gear pedal 10
   5.4 Hydrostatic drive release command 10
   5.5 Key ignition switch 10
   5.6 Throttle command 10
   5.7 Parking brake lever 11
   5.8 Headlights switch 11
   5.9 Cutting device engage and disengage functions 11
   5.10 Enable reverse gear cutting button 12
   5.11 Controls for adjusting the cutting unit assembly height 12
   5.12 Speed cruise control 12
   5.13 Counter (if fitted) 12
   5.14 Auxiliary socket for accessories 13
   5.15 Grass catcher tipping command 13
   5.16 Type "I" display and buzzers 13
   5.17 Type "II" display and buzzers 13
6. USING THE MACHINE 16
   6.1 Preparation 16
   6.2 Safety checks 17
   6.3 Using on slopes 17
   6.4 Start-up 18
   6.5 Operation 18
   6.6 Stop 20
   6.7 After operation 20
7. ROUTINE MAINTENANCE 20
   7.1 General information 20
   7.2 Refuelling / emptying the fuel tank 21
   7.3 Check, top up, draining of engine oil 21
   7.4 Anti-scalping wheels 22
   7.5 Battery 22
   7.6 Cleaning 22
   7.7 Nuts and bolts 23
8. EXTRAORDINARY MAINTENANCE 23
   8.1 Safety recommendations 23
   8.2 Cutting device assembly 23
   8.3 Replacing front / rear wheels 24
   8.4 Electronic circuit board 25
   8.5 Replacing a fuse 25
   8.6 Replacing bulbs 25
   8.7 Rear drive unit 25
   8.8 Front drive unit (4WD model) 26
   8.9 Regulating the grass catcher retaining pawl spring 26
9. STORAGE 26
10. HANDLING AND TRANSPORTATION 26
11. ASSISTANCE AND REPAIRS 26
12. WARRANTY COVERAGE 27
13. MAINTENANCE TABLE 28
14. PROBLEM IDENTIFICATION 29
15. ATTACHMENTS 31

1. GENERAL INFORMATION

1.1 HOW TO READ THE MANUAL

Some paragraphs in the manual contain important information regarding safety and operation and are emphasized in this manner:

NOTE *or* **IMPORTANT** *these give details or further information on what has already been said, and aim to prevent damage to the machine.*

The ⚠ symbol highlights danger. Non-compliance with the warning could lead to personal and/or third party injury and or damage.

The paragraphs highlighted in a square with grey spots indicate the optional characteristics not on all models documented in this manual. Check if the characteristic is on this model.

Whenever reference is made to a position on the machine "front", "back", "left" or "right" hand side, this refers to the operator's working position.

1.2 REFERENCES

1.2.1 Figures

The figures in these instructions for use are numbered 1, 2, 3, etc.
Components shown in the figures are marked A, B, C, etc.
A reference to component C in figure 2 is written: “See fig. 2.C” or simply “(Fig. 2.C)”.
The figures are given as a guide only. The actual parts may vary from those shown.

1.2.2 Titles

The manual is divided into chapters and paragraphs. The title of paragraph “2.1 Training” is a sub-title of “2. Safety regulations". References to titles or paragraphs are marked with the abbreviation chap. or par. and the relevant number. Example: “chap. 2” or “par. 2.1"

2. SAFETY REGULATIONS

2.1 TRAINING

⚠ ***Become acquainted with the controls and the proper use of the machine. Learn how to stop the engine quickly. Failure to follow the warnings and instructions may result in fire and/or serious injury.***

- Never allow children or persons unfamiliar with these instructions to use the machine. Local regulations may restrict the age of the operator.
- Never use the machine if the user is tired or unwell, or has taken medicine, drugs, alcohol or any substances which may slow his reflexes and compromise his judgement.
- Do not allow children or other passengers to ride on the machine.
- Bear in mind that the operator or user is responsible for accidents or unexpected events occurring to other people or their property. It is the user’s responsibility to assess the potential risk of the area where work is to be carried out, and to take all the necessary precautions to ensure his own safety and that of others, particularly on slopes or rough, slippery and unstable ground.
- If the machine is sold or lent to others, make sure that the operator looks over the user instructions contained in this manual.

2.2 PREPARATION

Personal Protective Equipment (PPE)

- Always wear suitable work attire, hard-wearing safety footwear with non-slip soles and long trousers. Do not operate the machine when barefoot or wearing open sandals. Wear hearing protection devices.
- The use of hearing protection devices may reduce the operator's capacity to hear warnings (cries or alarms). Monitor the area in and around the working zone at all times.
- Never wear scarves, shirts, necklaces, bracelets, clothing with flowing parts, laces or ties or any hanging or flapping attachments that could catch in the machine or in any objects or materials in the work area.
- Tie your hair back if it is long.

Work area/Machine

- Thoroughly inspect the entire work area and remove anything that could be thrown by the machine or damage the cutting device/rotating units (stones, branches, iron wire, bones, etc.).

Internal combustion engines: fuel

⚠ **DANGER**! The fuel is highly flammable.

- Keep the fuel in approved containers, in a safe place, away from any naked lights or heat sources.
- Keep the containers and storage area free of grass cuttings, leaves, or excessive grease.
- Keep the containers out of the reach of children.
- Do not smoke when filling up with fuel or when handling the fuel.
- Use a funnel to top up with fuel only in the open air.
- Do not inhale fuel fumes.
- Never remove the tank cap or add fuel while the engine is running or when the engine is hot.
- Open the fuel tank slowly to allow the pressure inside to decrease gradually.
- Do not approach the tank opening with a naked flame to check its contents.
- If you have spilt some fuel, do not attempt to start the engine but move the machine away from the area of spillage and avoid creating any source of ignition until the fuel has evaporated and fuel vapours have dissipated.
- Immediately clean up all traces of fuel spilt on the machine or on the ground.
- Replace caps of all fuel tanks and containers securely.
- Never start the machine in the same place in which you refilled it with fuel; the engine must be started in an area at least 3 metres from where you refuelled.
- If fuel is spilt on clothing, change clothing before starting the engine.

2.3 DURING OPERATION

Work Area

- Do not operate the engine in a confined space where dangerous carbon monoxide fumes can develop. All starting operations have to be carried out in an open or well ventilated area. Always remember that exhaust gases are toxic!
- When starting up the machine, do not direct the silencer and therefore the exhaust fumes towards flammable materials.
- Do not use the machine in environments at risk of explosion, in the presence of flammable liquids, gas or powder. Electrical contacts and mechanical friction can generate sparks that can ignite the powder or vapours.
- Work only in daylight or with good artificial light in good visibility conditions.
- Keep persons, children and animals away from the working area. Instruct another adult to supervise any children in the vicinity.
- Avoid working with wet grass, in the rain and when there is a risk of a thunderstorm, especially lightening.
- Pay careful attention to uneven ground (hills, dips), slopes, hidden hazards and obstacles that could limit visibility.
- Be very careful near ravines, ditches or embankments. The machine could overturn if a wheel slides over the edge or if the earth gives way.
- Pay attention on sloping ground which requires particular care to prevent overturning or loss of control of the machine. The main reasons for loss of control are:
  - Insufficient wheel grip
  - Excessive speed
  - Inadequate braking
  - Type of machine unsuitable for its task
  - Lack of awareness of the effect of ground conditions, especially slopes
  - Incorrect use as a towing machine.
- Be careful of traffic when operating the machine close to public roads.
- To avoid the risk of fire, do not leave the machine standing in high grass with the engine running.

Behaviour

- When working behind the wheel, do not become distracted and maintain the required level of concentration.
- Exercise caution when reversing or moving backwards. Look behind you to make sure there are no obstacles before and during operations in reverse gear.
- Use care when pulling loads or using heavy equipment:
  - Use approved draw-bar hitch points only when towing;
  - Limit loads to those that can be handled safely;
  - Do not turn sharply. Take care when reversing;
  - Use counterweight(s) or wheel weights whenever advised in the owner's manual.
- Pay attention when using the grass catcher and attachments that can alter the stability of the machine, especially on slopes.
- Always keep hands and feet away from the cutting device, when starting and when using the machine.

- Attention: the cutting device will continue to rotate for a few seconds after disengagement or after you have switched off the engine.
- Pay attention to cutting device assembly with more than one cutting mean, as rotating cutting device can trigger the rotation of the others.
- Keep away from the discharge opening.
- Do not touch the engine parts which heat up during use. Burns hazard.
- To avoid the risk of fire, do not leave the machine standing in high grass with the engine running.

⚠ If something breaks or an accident occurs during work, turn off the engine immediately and move the machine away to prevent further damage; if an accident occurs with injuries or third parties are injured, carry out the first aid measures most suitable for the situation immediately and contact the medical authorities for any necessary health care. Carefully remove any debris which could cause damage or injury to persons or animals if ignored.

Use limitations

- Never operate the machine with guards damaged, missing or incorrectly assembled (grass catcher, side discharge guards rear discharge guards)
- Don't use the machine if the attachments/ tools are not installed in their seats.
- Never disengage, deactivate, remove or tamper with the safety systems/ micro-switches installed.
- Do not alter the engine regulator settings, or run it at overspeed. Excessive engine speeds increase the risk of injury to operators and other persons.
- Do not strain the machine too much and do not use a small machine for heavy-duty work. If you use the right machine, you will reduce the risk of hazards and improve the quality of your work.
- The machine has not been approved for use on public roads. It must be used (as indicated by the highway code) in private areas closed to traffic.

2.4 MAINTENANCE, STORAGE

Ensure regular maintenance and correct storage to maintain machine safety and high performance levels.

Maintenance

- Never use the machine with worn or damaged parts. Faulty or worn-out parts must always be replaced and never repaired.
- To reduce the risk of fire, regularly check the machine for oil and/or fuel leaks.
- Be careful during adjustment of the machine to prevent entrapment of the fingers between moving parts of the cutting device and fixed parts of the machine.

⚠ The noise and vibration levels shown in these instructions are the maximum levels for use of the machine. The use of an unbalanced cutting device, the excessive speed of movement, or the absence of maintenance have a significant influence on noise emissions and vibrations. Consequently, it is necessary to take preventive steps to eliminate possible damage due to high levels of noise and stress from vibration. Maintain the machine well, wear ear protection devices, and take breaks while working.

Storage

- Do not store the machine with fuel in the tank in an area where fuel vapours could reach a naked light, a spark or a strong heat source.
- To reduce fire risks, do not leave containers with debris inside a room.

2.5 ENVIRONMENTAL PROTECTION

Safeguarding the environment must be a relevant and priority aspect of machine use, of benefit to the community and the environment we live in.

- Avoid being a disturbance to the neighbourhood. Use this machine at reasonable times of the day only (not early morning or late evening when the noise could cause disturbance).
- Adhere strictly to the local regulations governing the disposal of packaging, oil, fuel, filters, damaged parts or any other element which may have an impact on the environment; this waste should not be disposed of along with standard household waste, but must be disposed of separately and sent to special waste disposal facilities for handling and recycling.
- Comply with local regulations for the disposal of waste materials
- When the machine is withdrawn from service, do not dispose of it in the environment, but take it to a waste disposal facility in accordance with the local regulations in force.

3. GETTING TO KNOW THE MACHINE

3.1 DESCRIPTION OF THE MACHINE AND PLANNED USE

This machine is a ride-on lawn mower with seated operator.
The machine is equipped with an engine which drives cutting device protected by a casing, as well as a transmission unit that moves the machine.
The machine is equipped with:
- a two wheel (2WD) or four wheel (4WD) hydrostatic drive system, with infinitely variable forward and reverse gear ratios.

The operator is able to operate the machine and use the main controls, always seated in the operator's position.

The safety devices installed on the machine will disengage the engine and cutting device in a couple of seconds (par. 6.2.2).

3.1.1 Intended use

This machine was designed and built to cut grass.

Generally speaking this machine can:
1. mow grass and collect it in the grass catcher bag.
2. mow grass and deposit it on the ground via the rear.
3. mow, chop and deposit the grass on the ground (mulching effect).
4. mow the grass and deposit it on the ground laterally.

The use of special attachments provided for by the Manufacturer as original equipment or which may be purchased separately, allows this work to be done in various operating modes, illustrated in this manual or the instructions that accompany the single attachments. Likewise, the intended use can be extended to include other functions by applying supplementary attachments (if provided for by the Manufacturer), abiding by the restrictions and conditions indicated in the instructions accompanying the attachment.

3.1.2 Improper use

Any other usage not in keeping with the aforementioned ones may be hazardous and harm persons and/or damage things. Examples of improper use may include, but are not limited to:
- allowing children, animals or other passengers to ride on the machine as they could fall off and injure themselves or compromise safe driving by the operator;
- towing or pushing loads without the use of the specified attachment for towing;
- using the machine for riding over unstable, slippery, icy, stony, rough, marshy ground or puddles that do not allow the consistency of the ground to be assessed;
- using the cutting device on surfaces other than grass;
- using of the machine for leaf or debris collection.

IMPORTANT *Improper use of the machine will invalidate the warranty, relieve the Manufacturer from all liabilities, and the user will consequently be liable for all and any damage or injury to himself or others.*

3.1.3 User types

This machine is intended for use by consumers, i.e. non-professional operators. The machine is intended for "DIY" use only.

IMPORTANT *The machine must be used by one operator.*

3.2 SAFETY SIGNS

Various symbols appear on the machine (fig. 2). They are used to remind the operator of the behaviour to follow to use it with the necessary attention and caution.

Meaning of symbols:

Warning! Read the instructions before use.

Warning! Remove the key and read the instructions before carrying out any maintenance or repair work.

Danger! Ejected objects: Do not operate without either the rear discharge guard or the grass catcher being in place. (for models with rear collection system only).

Danger! Ejected objects: Ensure persons remain at a safe distance.

Danger! Machine rollover: Do not use the machine on gradients in excess of 10°.

Danger! Dismemberment: Make sure that children remain at a safe distance from the machine when the engine is running .

Cutting risk. Cutting device in operation. Do not insert hands or feet into the cutting device housing.

Warning! Keep away from hot surfaces.

Do not climb on the machine by treading on the cutting device assembly protection panels.

When using the towing kit, do not exceed the load limits indicated on the label, and respect the applicable safety regulations.

IMPORTANT *Any damaged or illegible decals must be replaced. Order replacement decals from an Authorised Service Centre.*

3.3 IDENTIFICATION LABEL

The identification label includes the following data (fig. 1):

1. Sound power level
2. Conformity marking
3. Year of manufacture
4. Type of machine
5. Serial number
6. Name and address of Manufacturer
7. Article code
8. Nominal power and maximum operating engine speed
9. Machine weight with empty tank in kg
10. Type of transmission

Write the identification data of the machine in the specific space on the label on the back of the cover page.

IMPORTANT *Quote the information on the product identification label whenever you contact an Authorised Service Centre.*

IMPORTANT *The example of the Declaration of Conformity is provided on the last page of the manual.*

3.4 MAIN COMPONENTS

The machine consists of a series of main components, which perform the following functions (fig. 1):

A. **Engine:** this moves the cutting device and drives the wheels. Its specifications and regulations for use are described in a specific manual.
B. **Cutting device assembly:** this is the assembly comprising the casing that houses the rotating cutting device, and the cutting device.
C. **Cutting device**: these are what cut the grass; the fins at the ends help convey the cut grass towards the discharge chute.
D. **Rear discharge guard (available upon request):** this can be fitted in place of the grass catcher and prevents objects from being drawn up by the cutting device and hurled away from the machine. (for rear collection models only).
E. **Side discharge chute:** in addition to depositing the grass on the ground laterally, the side chute also constitutes a safety element, since it prevents any objects picked up by the cutting device from being projected long

distance from the machine (for models with side discharge function only).

F. **Grass catcher:** in addition to collecting the mown grass, the grass catcher also constitutes a safety element, since it prevents any objects picked up by the cutting device from being projected long distance from the machine (*for models with rear collector only*).

G. **Discharge chute:** this is the part connecting the cutting device assembly to the grass catcher (*for models with rear collector only*).

H. **Driving seat:** this is where the machine operator sits. It has a sensor connected to safety devices for detecting the presence of the operator.

I. **Steering wheel:** turns the front wheels.

J. **Front bumper:** this protects the front section of the machine.

K. **Battery**: provides the energy for starting the engine. Its specifications and regulations for use are described in a specific manual.

4. ASSEMBLY

⚠ ***The safety regulations to follow are described in chap. 2. Strictly comply with these instructions to avoid serious risks or hazards.***

For storage and transport purposes, some components of the machine are not installed in the factory and have to be assembled after unpacking. Follow the instructions below.

⚠ ***Unpacking and completing the assembly should be done on a flat and stable surface, with enough space for machine handling and its packaging, always making use of suitable equipment. Do not use the machine until all the indications provided in the "ASSEMBLY" section have been carried out.***

4.1 ASSEMBLY COMPONENTS

The packaging holds the components needed for assembly as listed in the table below:

	Description
1	Steering wheel
2	Dashboard cover and steering wheel assembly parts
3	Driving seat
4	Front bumper (if fitted)
5	Bag with mounting screws etc. and instructions TS-TX-TH models only) (models with rear collector only)
6	Grass catcher bag supports and associated attachments (*models with rear collector only)*
7	Side discharge chute (*for models with side discharge only)*
8	Cutting device assembly side strengthener (if fitted).
9	Envelope containing: - the instruction manuals and documents - driving seat assembly screws - side discharge chute assembly fittings (*for models with side discharge only)* - the connection screws for the battery cables - 2 starter keys - 1 spare 10 A fuse
10	Mulching kit (*models with side discharge function only)* (if fitted).

4.1.1 Unpacking

1. Carefully open the packaging, paying attention not to lose components.
2. Consult the documentation in the box, including these instructions.
3. Remove all the unassembled parts from the box.
4. Remove the machine from the packaging taking the following precautions:
   – move the cutting device assembly to its maximum height (par. 5.11) to protect it against damage when the machine is lifted off the base pallet;
   – Lift the machine off the base pallet.
5. Move the front drive release lever to the released position (par. 5.4).

4.2 STEERING WHEEL ASSEMBLY

1. Put the machine on a flat surface and straighten the front wheels.
2. Using a screwdriver, remove the central cap (fig. 3.B) from the steering wheel (fig. 3.A).
3. Fit the steering wheel (fig. 3.A) onto the protruding shaft (fig. 3.C), rotate it so that the spokes are facing the seat and then push it so that the steering wheel hub couples with the protruding end of the pin (fig. 3.D).
4. Secure the steering wheel using the screw (fig. 3.E) and the washers (fig. 3.F) e (fig. 3.G) supplied, in the indicated sequence.
5. Tighten the screw (fig. 3.E) fully using a socket wrench.

6. Replace the cap on the steering wheel (fig. 3.B) inserting it so that it clicks into place.

4.3 SEAT ASSEMBLY

Pull the regulator lever up (fig. 4.C) and slide the seat (fig. 4.A) into the guide (fig. 4.B) from the steering wheel side, until it clicks into one of the six positions.
At this point, the seat has been mounted securely, so that it cannot be removed again without pressing the release lever (fig. 4.D).

4.4 MOUNTING AND CONNECTING THE BATTERY

The battery (fig. 5.A) is housed under the seat and secured by a spring (fig. 5.B).

1. First connect the red wire (fig. 5.C) to the positive pole (+) and then the black wire (fig. 5.D) to the negative pole (–), using the screws supplied as shown.
2. Mount the battery retaining spring (fig. 5.B), making sure that the cables are routed correctly in front of the battery, so that they are not pinched by the spring (fig. 5.B).

IMPORTANT *Always fully charge the battery according to the instructions in the battery booklet.*

IMPORTANT *To avoid tripping the electronic board protection device, never attempt to start the engine if the battery is not fully charged !*

4.5 MOUNTING THE GRASS CATCHER SUPPORTS

Mount the two supports (fig. 6.A) on the rear plate (fig. 6.B), using the three screws (fig. 6.C) supplied for each support, as indicated, without locking the corresponding nuts (fig. 6.D).
Fasten the upper part of the grass catcher frame (fig. 6.E) to the supports and centre it with respect to the rear plate (fig. 6.B).
Adjust the position of the two supports (fig. 6.F) with respect to the stop (fig. 6.G) so that, by rotating the grass catcher frame, the stud (fig. 6.H) fits into the housing correctly (fig. 6.I).
Check again that the frame (fig. 6.E) is centred correctly with respect to the rear plate (fig. 6.B) and that it rotates correctly, as described above, then tighten the fastening screws (fig. 6.C) and nuts (fig. 6.D).

4.6 REMOVING THE GRASS CATCHER RETAINING PAWL

When the machine is shipped the grass catcher retaining catch (fig. 7.A) is secured to the rear plate by device of the hook (fig. 7.B). This must be removed before mounting the grass catcher bag supports and may no longer be used

4.7 MOUNTING THE REAR BUMPER

- **Type “I” bumper**
- **Type “II” bumper**
  1. Mount the front bumper (fig. 8.A) on the lower part of the frame (fig. 8.B) using the four screws (fig. 8.C).

4.8 MOUNTING THE GRASS CATCHER BAG

- **For TC model**

1. First assemble the frame, uniting the upper part (fig. 9.A) with the lower part (fig. 9.B), using the nuts and bolts supplied (fig. 9.C) as indicated. Position the angular plates (fig. 9.D) and (fig. 9.E), respecting the right (R⇑) left (L⇑) alignment, and securing them to the frame using four self-tapping screws (fig. 9.F).
2. **Models with electrical tipping function only:** Mount the two rollers (fig. 9.G) on the support pins (fig. 9.H), making sure that the catcher is facing the support, and secure it using elastic rings (fig. 9.I). Next, secure the supports to the front frame (fig. 9.B) using the nuts and bolts (fig. 9.J).
3. Insert the frame into the canvas cover (fig. 9.K), making sure that it is positioned correctly around the base. Attach the various plastic profiles to the frame tubes using a screwdriver (fig. 9.L).
4. Insert the handle (fig. 9.M) via the holes on the cover (fig. 9.N), and secure the resulting sub-assembly to the frame using the screws (fig. 9.O) as indicated, and the rear self-tapping screws (fig. 9.P).
5. Mount the strengthening cross bar (fig. 9.Q) under the frame using the nuts and bolts (fig. 9.R), so that the flat part is facing the canvas. Insert the emptying lever (fig. 9.S) into its housing and fit the retaining screw (fig. 9.T) and associated nut (fig. 9.U).

- **TS-TX-TH models**

Complete the grass catcher mounting sequence as described in the instruction sheets supplied with the components.

4.9 MOUNTING THE GRASS CATCHER TIPPING LEVERS

Position the lever shaft (fig. 10.A) so that it lies in the groove in the two plates (fig. 10.B) and secure it to the inner part of the grass catcher bag supports (fig. 10.C), using the nuts and bolts (fig. 10.D) supplied in accordance with the sequence indicated in the figure.
Connect the end of the lifting piston shaft (fig. 10.E) to the lever (fig. 10.F) by using the pin (fig. 10.G) and mount the two elastic rings (fig. 10.H).
Before mounting the grass catcher bag on its support, make sure that tipping levers move correctly.

4.10 MOUNTING THE SIDE GUARDS OF THE CUTTING DEVICE ASSEMBLY (IF ANY)

Mount the safety panels (fig. 11.A) using the screws (fig. 11.B) and nuts (fig. 11.C) supplied, in accordance with the instructions provided for each machine type.

4.11 SIDE DISCHARGE CHUTE ASSEMBLY (FOR MODELS WITH SIDE DISCHARGE ONLY)

1. From the inside of the side discharge chute (fig. 12.A), fit the spring (fig. 12.B) by inserting the terminal (fig. 12.B.1) into the hole and turning it so that both the spring (fig. 12.B) and the terminal (fig. 12.B.2) are securely positioned in their housings.

2. Position the side discharge chute (fig. 12.A) in line with the cutting device assembly brackets (fig. 12.C). Using a screwdriver, turn the second terminal (fig. 12.B.2) of the spring (fig. 12.B) to bring it outside the side discharge chute.

3. Fit the pin (fig. 12.D) in the holes on the brackets (fig. 12.C) and on the side discharge chute, so that it passes through the coils of the spring (fig. 12.B) and the drilled end comes out of the inner most bracket.

4. Insert the cotter pin (fig. 12.E) into the hole (fig. D.1) on the pin (fig. 12.D) and rotate the pin in order to bend the two ends (fig. 12.E.1) of the cotter pin, (with the aid of a pair of pliers), so that it cannot slide out, causing the pin (fig. 12.D) to disengage.

⚠ ***Check that the spring works correctly and keep the side discharge chute securely lowered. Make sure that the pin is fitted properly to prevent it from falling out accidentally.***

IMPORTANT *For models with optional side unloading: make sure that the side unloading guard (Fig. 21.A) is lowered and locked by the safety lever (Fig. 21.B).*

IMPORTANT *Before disassembling or servicing the deflector, always push the safety lever (Fig. 21.B) and lift the side unloading guard (Fig. 21.A) to allow disassembly.*

NOTE *To remove the deflector, perform assembly steps in reverse order.*

5. CONTROLS

5.1 BRAKE PEDAL

This pedal operates the brakes on the rear wheels (fig. 13.A, 14.A)

5.2 FORWARD GEAR PEDAL

This pedal is used to apply traction to the wheels and regulate the speed of the machine when it is moving forward (fig. 13.B, 14.B):

1. **Forward drive gear.** Increasing the pressure on the pedal progressively increases the speed of the machine.

2. **Neutral position.** The pedal automatically goes into neutral position when released.

NOTE *The "Neutral" condition is indicated by the lamp (fig. 16.F).*

NOTE *If the operator presses the pedal while the parking brake (fig. 13.D) is on, the engine stops.*

5.3 REVERSE GEAR PEDAL

This pedal is used to apply traction to the wheels in reverse and regulate the speed of the machine (fig. 13.C, 14.C):

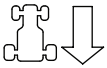

1. **Reverse gear.** Increasing the pressure on the pedal progressively increases the speed of the machine.
   ⚠ ***Reverse must only be engaged when the machine has stopped.***
2. **Neutral position.** The pedal automatically goes into neutral position when released.

NOTE *The "Neutral" condition is indicated by the lamp (fig. 16.F).*

NOTE *If the operator presses the pedal while the parking brake (fig. 15.D) is on, the engine stops.*

5.4 HYDROSTATIC DRIVE RELEASE COMMAND

This command has two positions, as indicated on the label (fig. 13.D, 14.D):

1. Drive engaged : for all uses, when moving and during cutting.

2. Drive disengaged : this makes it much easier to move the machine by hand, with the **engine turned off.**

IMPORTANT *To avoid damaging the drive unit, perform this operation only when the engine is stopped and the pedals (fig. 13.B, 13.C, 14.B, 14.C) are in the neutral position.*

- **4WD model only**

The machine may only be moved easily backwards, even if the rear drive is released.

5.5 KEY IGNITION SWITCH

The key enables/disables the machine ignition

It has three positions (fig. 15.A):

1. **Stop position.** The machine turns off immediately.

2. **On position.** All functions are active.

3. **Start position.** Switch on the starter motor to start the machine. If you release the key on start it will automatically return to On.

5.6 THROTTLE COMMAND

Regulates the engine's r.p.m.

Depending on the type of motor, there are two types of throttle control:

A. **Type "I" with separate Choke command** (Fig. 15.B + Fig. 15.C)
B. **Type "II"** (Fig. 15.B)

The positions shown correspond to:

1. **Choke Command - Cold start.** (if fitted) This command is used to start the engine when it is cold. The «CHOKE» position enriches the mixture so it must only be used for the time necessary for cold starts.

2. **Maximum engine speed.** To be used always when starting the machine, while it is On and during grass cutting operations.

3. **Minimum engine speed.** Used when the engine is sufficiently warm during stationary periods of operation.

NOTE *When moving from one area to another, place the lever in a position between "tortoise" and "hare".*

NOTE *Some models are equipped with a system that automatically controls*

the choke position in the carburettor during engine ignition and heating.

5.7 PARKING BRAKE LEVER

This lever stops the machine from moving when it has been parked.

This lever has two positions (fig. 15.D), corresponding to:

1. **Brake not engaged.** To release the parking brake, press the pedal (fig. 13.A, 14.A). The lever returns to the brake disengaged position.

2. **Brake engaged.** To engage the parking brake, press the pedal down as far as it will go (fig. 13.A, 14.A) and move the lever to the brake engaged position. When you take your foot off the pedal it will be blocked in the lowered position.

5.8 HEADLIGHTS SWITCH

This button (fig. 15.E) is used to control the headlights when the key (fig. 15.A) is in the «ON» position.

5.9 CUTTING DEVICE ENGAGE AND DISENGAGE FUNCTIONS

This control is used to engage and disengage the cutting device by using of an electro-magnetic clutch:

1. **Cutting device engaged.** Mushroom type button pulled out (fig. 15.F.1) or button pressed (fig. 15.F.2).

2. **Cutting device disengaged.** Mushroom type button pressed (fig. 15.F.1) or button released (fig. 15.F.2).

⚠ ***When the cutting device are disengaged, a brake is applied simultaneously in order to stop them rotating within a few seconds.***

NOTE *The "Cutting device disengaged" condition is indicated by the lamp (fig. 16.A).*

NOTE *If you engage the cutting device without taking the necessary safety precautions, the engine shuts down and cannot be restarted (see par. 6.2.2)*

5.10 ENABLE REVERSE GEAR CUTTING BUTTON

Press and hold the button (fig. 15.G) to reverse while the cutting device are engaged, without causing the engine to stop.

5.11 CONTROLS FOR ADJUSTING THE CUTTING UNIT ASSEMBLY HEIGHT

- **Control with lever**

This lever is used to raise and lower the cutting device assembly, which may be positioned at 7 different cutting heights (fig. 15.H).

The seven positions for this lever, shown as «1» to «7» on the label, correspond to various cutting heights between 3 and 9 cm.

To change positions, press the release button on the end of the lever.

- **Control with lever and knob**

This lever (fig. 15.H) is used to raise and lower the cutting device assembly.

- **Position «A»**
  Cutting device assembly raised.

- **Position «B»**
  Cutting device assembly lowered.

The knob (fig. 15.I) is used to set the cutting device assembly to one of 9 different positions, corresponding to nine cutting heights between 2 and 10 cm.

1. Set the lever (fig. 15.H) to position «A» .
2. Adjust the cutting height using the knob (fig. 15.I).
3. Set the lever (fig. 15.H) to position «B» to move the cutting device assembly automatically to a pre-defined cutting height.

NOTE *Set the lever (fig. 15.H) to position «A» during transport and shipping.*

5.12 SPEED CRUISE CONTROL

This device is used to maintain the forward speed at the desired value, without having to maintain pressure on the pedal (fig. 13.B, 14.B).
The mushroom type control button has two positions:

1. **Pressed.** Device disabled (deactivated)

2. **Pulled out.** Device enabled (active)

- When the device is activated, the machine maintains the same forward speed, without having to operate the pedal (fig. 13.B, 14.B).
- The device cannot be used in reverse mode.
- The reverse pedal is disabled when this device is enabled (fig. 13.C, 14.C).

NOTE *Speeds may vary with respect to the selected value when the machine is moving up or down slopes.*

To deactivate the device and restore pedal speed control (fig. 13.B, 14.B) simply:
- press the pedal (fig. 13.B, 14.B);

  or

- press the brake pedal (fig. 13.A, 14.A).

In both cases, the mushroom button will return automatically to the «Pressed» position.

IMPORTANT *Never use the mushroom button to deactivate the device.*

5.13 COUNTER (IF FITTED)

The counter (fig. 15.K) is activated whenever the key (fig. 15.A) is set to the «ON» position, and indicates the engine operating hours.

5.14 AUXILIARY SOCKET FOR ACCESSORIES

This socket can be used to connect electrical devices that run off a 12 Volt dc power supply, with a maximum power rating of 50 Watt, and fitted with a compatible plug (motoring type plug) (fig. 15.M).

– The socket is live only when the key (fig. 15.A) is in the «ON» position.

5.15 GRASS CATCHER TIPPING COMMAND

• **Manual command**
To tip the grass catcher bag in order to empty it, the operator must extract the lever (fig. 15.L) from its housing .

• **Electrical command**
To tip the grass catcher bag in order to empty it, the operator must press and hold the button (fig. 15.N) until the command motor stops running.
The grass catcher is returned to the working position by pressing and holding the button (fig. 15.O) until the retaining catch locks into place and the command motor stops running.

5.16 TYPE "I" DISPLAY AND BUZZERS

When the key is turned to the «ON» position, all the indicator lights switch on for about half a second (accompanied by a short acoustic signal) to indicate that they function correctly. Thereafter, these lights indicate:

Indicator light ON: cutting devices engaged (Fig. 16.A).

Indicator light ON: parking brake engaged (Fig. 16.B).

Indicator light ON: operator not present (Fig. 16.C).

Flashing indicator light: fuel is in reserve (Fig. 16.D).

Flashing indicator light: engine lubrication faults (Fig. 16.E). Stop engine immediately, check oil level and contact an Authorized Service Centre.

Indicator light ON: grass catcher or rear discharge guard missing (Fig. 16F);

Indicator light ON: when the engine is running there are battery recharging faults (Fig. 16.G).

Flashing indicator light before start-up: the battery is unable to start the engine. Contact an Authorized Service Centre (Fig. 16.G).

N Indicator light ON: transmission in "neutral" (Fig. 16.H).

• **Acoustic signals -** Buzzer

There are two types of acoustic signal:

1. Continuous acoustic signal:
   - Electronic card protection system has intervened.
   - The engine has been switched off for more than 30 seconds with the key in the "DRIVE" position.
2. Intermittent acoustic signal:
   - The grass catcher is full.

5.17 TYPE "II" DISPLAY AND BUZZERS

When the key is turned to the «ON» position, all the icons switch on for about half a second (accompanied by a short acoustic signal) to indicate that they function correctly, then the display goes into "Timer" mode.

Thereafter, these lights indicate:

Indicator light ON: cutting devices engaged (Fig. 16.A).

Indicator light ON: parking brake engaged (Fig. 16.B).

Indicator light ON: operator not present (Fig. 16.C).

Simple fuel indicator light (Fig. 16.D).

Flashing indicator light: fuel is in reserve.

Fuel indicator light with level indicator (Fig. 16.D).

The indicator light shows the fuel level in the tank in accordance with the following criteria:

Fuel level is between full and about half full.

Fuel level is between half full and reserve.

Fuel level is in reserve.

NOTE *The reserve tank holds approximately 2 litres of fuel, which is sufficient for operating the machine for 30-40 minutes at nominal engine speed.*

Flashing indicator light: engine lubrication faults (Fig. 16.E). Stop engine immediately, check oil level and contact an Authorized Service Centre.

Indicator light ON: Grass catcher or rear discharge guard missing (Fig. 16F) (only for models with rear grass catcher);

Indicator light ON: when the engine is running there are battery re-charging faults (Fig. 16.G).

Flashing indicator light before start-up: the battery is unable to start the engine. Contact an Authorized Service Centre (Fig. 16.G).

N Indicator light ON: transmission in "neutral" (Fig. 16.H).

- **Operating functions**

Press the "MODE" button to access operating functions in sequence.

HOURS Hour meter (Fig. 16.I). Indicates the total number of engine operating hours.

Voltmeter (Fig. 16.O). Indicates the battery charge state.

RPM Tachometer (Fig. 16.K) Indicates the engine speed as numerical values or a series of asterisks, corresponding to:

Displayed values:

< 1600	engine idling speed
< 2500	transfer speed
> 2500	cutting speed
* (**)	engine idling speed
** *** ****	transfer speed
***** ******	cutting speed

NOTE *When the engine speed display is flashing, it indicates that the current engine speed is unsuitable for mowing grass.*

Clock (if present) (Fig. 16.L) Indicates the time in 24 hour/day mode.

To set-up the clock, turn the ignition key to the «ON» position and, without starting the engine, proceed as follows:

- Press the "MODE" key repeatedly until the clock icon appears.
- Hold the "MODE" button pressed until the first two digits (hour) flash.
- Press one of the two side buttons (Fig. 16.K, L) to increase or decrease the setting by one unit.
- Press the "MODE" button until the other two digits (minutes) flash.
- Press one of the two side buttons to increase or decrease the setting by one unit.
- Press the "MODE" button to complete the setting.

NOTE *The clock is powered by a back-up battery; when this battery goes flat, contact an Authorised Service Centre.*

- **Acoustic signals -** Buzzer

There are two types of acoustic signal:

1. Continuous acoustic signal:
   - Electronic card protection system has intervened.
   - The engine has been switched off for more than 30 seconds with the key in the "DRIVE" position.

2. Intermittent acoustic signal:
   - The grass catcher is full.

TYPE "III" DISPLAY AND BUZZERS
When the key is turned to the "DRIVE" position, all the icons switch on for about half a second (accompanied by a short acoustic signal) to indicate that they function correctly.

Thereafter, these icons indicate:

Icon ON: cutting devices engaged (Fig. 16.A).

Icon ON: parking brake engaged (Fig. 16.B).

Indicator light ON: operator not present (Fig. 16.C).

Fuel icon with level indicator (Fig. 16.D).

The icon indicates the fuel level in the tank in accordance with the following criteria:

Fuel level is between full and about half full.

Fuel level is between half full and reserve.

Fuel level is in reserve.

NOTE *The reserve tank holds approximately 2 litres of fuel, which is sufficient to operate the machine for 30-40 minutes at nominal engine speed.*

Icon ON: engine lubrication faults (Fig. 16.E). Stop engine immediately, check oil level and contact an Authorized Service Centre.

Icon ON: Grass catcher or rear discharge guard missing (Fig. 16F) (only for models with rear grass catcher);

Icon ON: The grass catcher is full and must be emptied (Fig. 16.F) (only for models with rear grass catcher).

Battery icon with level indicator (Fig. 16.G).

Icon ON: Battery is charging.

Icon ON: Battery voltage level is optimal.

Icon on with engine off: Indicates that the battery needs re-charging

Icon on with engine on: Indicates battery charging problems.

Flashing icon: The battery is unable to start the engine. You must contact an Authorized Service Centre.

Icon ON: transmission in "neutral" (Fig. 16.H).

Hour meter (Fig. 16.I). Indicates the total number of engine operating hours.

Headlights (Fig. 16.P). Icon ON: Indicates that the headlights are on.

Maintenance required (Fig. 16.Q). Icon ON: Routine maintenance indicator. The maintenance schedule to follow is described in section 13. The icon comes ON every 50 hours and remains ON for 1 hour.

Green Area (Fig. 16.R). The engine rotation speed is suitable for optimal grass cutting.

- **Acoustic signals -** Buzzer

There are two types of acoustic signal:

1. Continuous acoustic signal:
   - Electronic card protection system has intervened.
   - The engine has been switched off for more than 30 seconds with the key in the "DRIVE" position.
2. Intermittent acoustic signal:
   - The grass catcher is full.

6. USING THE MACHINE

⚠ ***The safety regulations to follow are described in chap. 2. Strictly comply with these instructions to avoid serious risks or hazards.***

6.1 PREPARATION

Before starting to mow, it is necessary to carry out several checks and operations to ensure you can work efficiently and in maximum safety.

1. ensure the machine is level and resting safely on the ground:
2. select the appropriate operating mode (par. 6.1.4);

6.1.1 Filling with oil and fuel

IMPORTANT *The machine is supplied without engine oil or fuel.*

Before using the machine check for fuel and the oil level (par. 7.2, par. 7.3). For refuelling and oil top-up methods and precautions follow the instructions given in (par. 7.2, par. 7.3) and in the engine handbook.

6.1.2 Seat adjustment

The sliding seat may be set to one of six different positions.
To adjust it, lift the handle (fig. 17.A), slide the seat and lock it in the desired position.

6.1.3 Tyre pressure

Having the right tyre pressure is the main condition for ensuring that the cutting device assembly is horizontal and mows evenly.

1. Unscrew the valve caps
2. Connect a compressed air line with a gauge to the valves (fig. 18)
3. Adjust the pressure according to the values indicated in the "Technical Data" chart.

6.1.4 Preparing the machine before starting work

NOTE *This machine can be used to mow lawns in a number of different ways; before starting work, prepare the machine based on how the lawn is to be mowed.*

a. Preparation for grass cutting and collection in the grass catcher (for rear collection models only)

- Couple the grass catcher (fig. 19.A) to its supports (fig. 19.B) and centre it with respect to the plate, making sure that the two reference marks are aligned (fig. 19.B).
- Make sure that the lower pipe of the grass catcher opening is attached to the pawl (fig. 19.C).
- If the coupling is difficult or too loose, regulate the retaining spring (see 8.9).

b. Preparation for mowing and rear grass discharge (models with rear grass catcher only) (if fitted)

- If you decide to work without the grass catcher, a rear discharge guard kit is available upon request (Fig. 20, section 15.7) which must be securely mounted on the rear plate as indicated in the instructions provided.

c. Preparation for mowing and mulching of grass

- If you decide to mow the grass, mulching it and leaving it on the grass, a "mulching" kit is available upon request (chap. 15.1). This has to be attached to the rear plate as indicated in the instructions.

⚠ ***In the case of models with side discharge, make sure that the lateral discharge support has been mounted (fig. 22.A) (if fitted).***

d. Prepare the machine for cutting and lateral grass discharge (for models with side discharge only):

- Always make sure that the spring inside the deflector (Fig. 21.A) and the safety lever (Fig. 21.B) operate correctly, holding it firmly in the lowered position.

- When cutting tall or wet grass, we recommend removing the lateral discharge strengthener (fig. 22.A) (if fitted).
- To remove the strengthener, undo the screws (fig. 22.B) while maintaining the side discharge chute in the raised position (fig. 22.C).

⚠ ***In the event of collisions without the side discharge strengthener fitted (fig. 22.A), the cutting device assembly may be deformed.***

⚠ ***Always remember to replace the side discharge strengthener after use.***

6.1.5 Positioning the anti-scalping wheels

The anti-scalping wheels are used to reduce the risk of tearing up sections of lawn, which can occur when the edge of the cutting device assembly drags over irregular ground.
Position the wheels as indicated (par. 7.4).

6.2 SAFETY CHECKS

Run the following safety checks and check that the results correspond to those outlined on the tables.

⚠ ***Always carry out the safety checks before use.***

6.2.1 General safety check

Object	Result
Battery	No damage to the casing, cover or terminals
Rear discharge guard, grass catcher	Good condition. No damage. Properly installed.
Side discharge guard, suction grid	Good condition. No damage. Properly installed
Fuel lines and connections.	No leaks.
Electrical cables.	All insulation intact. No mechanical damage.
Oil lines	No leaks. No damage.
Safety devices	Proceed as indicated in par. 6.2.2

6.2.2 Control of safety devices

The safety devices work in two ways:
A. they prevent the engine from starting if all the safety requirements have not been met;
B. by stopping the engine if even just one of the safety requirements is lacking.

Action	Result
1. gear in “neutral”; 2. cutting device disengaged; 3. operator seated.	The engine starts
the operator leaves his seat	The engine stops
the grass catcher is lifted or the rear discharge guard removed without disengaging the cutting device *(for rear collection models only)*	The engine stops
the parking brake is engaged without disengaging the cutting device	The engine stops
the speed change is activated or the drive pedal with the parking brake engaged	The engine stops
the reverse gear is engaged with the cutting device engaged, without pressing the consent button (par. 5.10)	The engine stops
Drive the machine forwards and backwards, shift to neutral /release the drive pedal (par. 5.2; par. 5.3)	The machine slows down and stops
Press the brake pedal (par. 5.1)	The machine stops
Test driving	No abnormal vibrations. No abnormal sound

⚠ ***If any of the results fail to match the indications provided in the tables, do not use the machine! Contact a service centre to have it checked and repaired if necessary.***

IMPORTANT *Always bear in mind that the safety devices prevent the engine from starting if safety requirements have not been met. In these cases, once the start consent has been reinstated, the ignition key (fig. 15.A) must first be turned back to Off before the engine can be restarted.*

6.3 USING ON SLOPES

Comply with the limits indicated in the "Technical Data" Tables as in "fig. 24" regardless of the mowing direction.

Remember there is no such thing as a "safe” slope. Driving on grass slopes requires particular care. To prevent overturning or loss of control over the machine:

- Never mow across the face of the slope. Lawns on a slope have to be mowed moving up and down and never across them. When changing direction, take great care that the wheels facing the slope do not hit any obstacles (such as stones, branches, roots,

etc.) that may cause the machine to slide sideways, tip over or make you lose control.
- Do not stop or start suddenly when going up or downhill;
- Shift to drive gear very gently paying particular attention to prevent the machine from tipping up.
- Reduce speed:
  – before changing direction and during tight turns
  – before facing a slope, particularly downhill
- Never switch to reverse gear to decrease speed when going downhill: this could cause loss of control of the machine, especially on slippery ground.
- Always engage the parking brake before leaving the machine at a standstill and unattended.
- In order to exploit the braking effect of the hydrostatic drive, when the transmission is not engaged, avoid pressing the drive pedal when moving down hill

6.4 START-UP

1. Open the fuel tap (fig. 25.A) (if provided).
2. Sit in the operator's position.
3. Put the drive into neutral («N») (par. 5.2; par. 5.3).
4. Disengage the cutting device (par. 5.9).
5. Engage the parking brake (par. 5.7).
6. Shift the throttle control to maximum "hare" speed position (par. 5.6).
7. **If cold starting:** engage choke control (para 5.6) (if present).
8. Insert the key switch and turn it to the running position to engage the electric circuit. Wait for 2 seconds and turn it to the start-up position to start the engine.
9. Release the ignition key once the engine has started.
10. **If cold starting:** as soon as the engine ticks over:

10a. Deactivate the choke command (par. 5.6, type "II"), setting the accelerator command to the maximum speed - "hare" (if fitted).

10b. Deactivate the choke command (par. 5.6, type "I") (if fitted).

NOTE *Using the choke when the engine is already warm can foul the spark plugs and cause the engine to run erratically.*

11. When the engine has started, shift the throttle control to the minimum «tortoise» speed position.

NOTE *If there are engine starting problems, do not persist as you can risk running the battery flat and flooding the engine. Turn the key to the Off position, wait for a few minutes and then repeat the operation. If the malfunction persists, refer to the engine manual and chapter «14» in this manual.*

6.5 OPERATION

6.5.1 Forward gear and riding without mowing

When moving the machine:
- disengage the cutting device (par. 5.9);
- set the cutting device assembly to the fully raised position (par. 5.11);
- shift the throttle control to a point midway between the «tortoise» and «hare» speed positions.
- release the parking brake by releasing the brake pedal (par. 5.7).
- press the drive pedal (par. 5.2) in the "forward" direction and accelerate to the desired speed by applying pressure to the pedal and operating the throttle.

⚠ ***Drive must be engaged in accordance with the modes described (paragraph 5.2) to avoid sudden meshing, jerking start and loss of control of the vehicle, especially on slopes.***

6.5.2 Braking

Reduce machine speed by decreasing the engine speed, then press the brake pedal (par. 5.1) to reduce the speed further, until bringing the machine to a standstill.
The machine can be significantly slowed down by releasing the drive pedal (section 5.2).

6.5.3 Reverse gear

IMPORTANT *Reverse must be engaged when the machine has stopped.*

1. Press the pedal (par. 5.1) until the machine comes to a stop;
2. Start reversing by pressing the drive pedal in the "R" direction (par. 5.3).

6.5.4 Grass cutting

To operate the machine proceed as described below:

1. shift the throttle to the maximum speed position ("hare"); this position is always used when using the machine;
2. bring the cutting device assembly to the highest position;
3. engage the cutting device (par. 5.9) only on grass lawns; avoid engaging them on stony ground or when the grass is very high;
4. When starting to cut grass, start off slowly and carefully, as described above;
5. Regulate the speed and cutting height (par. 5.11) according to the lawn conditions (grass height, density and humidity) and the quantity of grass to be removed;
6. The appearance of the lawn will be improved if the grass is always cut at the same height and in two alternating directions (fig. 27).

IMPORTANT *To proceed in reverse gear with the cutting device engaged, it is necessary to press and hold the consent button (par. 5.10) so as not to cause the engine to stop.*

Lower the speed whenever you note a drop in engine speed, since a forward speed that is too fast compared to the amount of grass being cut will never mow the grass well.

Disengage the cutting device and move the cutting device assembly to the highest position:
- When moving between work areas
- When driving on grass free surfaces
- Every time it is necessary to overcome an obstacle.

6.5.5 Suggestions for maintaining a nice lawn

- To keep a lawn green and soft with a good appearance, it should be cut regularly. A lawn can be composed of different types of grass. If the lawn is cut frequently, grass and roots grow more vigorously, forming a solid grassy bed. If the lawn is cut is less frequently, higher grass and weeds start growing (clover and daisies, etc.). The frequency of mowing should be in relation to the rate of growth of the grass, which should not be left to grow too much between one cut and the next.
- The best height of the grass on a well-kept lawn is approx. 4-5 cm and with one mowing, you do not need to remove more than a third of the total height. If the grass is very tall, it should be cut twice in a twenty-four hour period. the first cut should be carried out with the cutting device at the maximum height, and the second cut at the desired height (fig. 26).
- If the cutting device are positioned too low, they will tend to rip the grass out by its roots, resulting in a "patchy" effect.
- During hot and dry periods, the grass should be cut a little higher to prevent the ground from drying out.
- It is always better to cut the grass when dry. Do not cut grass when wet; this may reduce the effectiveness of the cutting device, due to the grass getting stuck to it, and result in the grass being ripped out of the ground.
- The cutting device must be in good condition and well sharpened so that the grass is cut straight without a ragged edge that leads to yellowing at the ends.
- The engine must run at full speed, both to ensure a sharp cut of the grass and to get the necessary thrust to push the cuttings through the discharge chute.
- If the discharge chute tends to get blocked with grass, you should reduce the forward speed as it may be too high for the condition of the grass. If the problem persists, the probable causes are either badly sharpened cutting device or deformed fins.
- Be very careful when mowing near bushes or kerbs as these could distort the horizontal position of the cutting device assembly and damage its edge as well as the cutting device.

6.5.6 Emptying the grass catcher (for rear collection models only)

NOTE *The emptying of the grass catcher can only be done with the cutting device disengaged, otherwise the engine stops.*

- Do not let the grass catcher become too full as this may block the discharge chute.
- When the grass catcher is full you will hear a warning sound:
  1. disengage the cutting device (par. 5.9) and the audible signal will stop;
  2. shift the throttle control to minimum "tortoise" speed position
  3. stop moving forward and switch to neutral (par. 5.2; par. 5.3);
  4. engage the parking brake;

- **Manual command**
  5. extract the lever (fig. 28.A) and tip the grass catcher bag up in order to empty it;
  6. close the grass catcher again so that it remains coupled to the pawl (fig. 28.B) and replace the lever.

- **Electrical command**
  5. with the operator in the sitting position, press and hold the button (fig. 28.C) until the grass catcher bag is in the fully tipped position;
  6. once the bag is empty, press and hold the button (fig. 28.D) until the grass catcher bag is fully lowered, make sure that it remains coupled to the pawl (fig. 28.B).

NOTE *After emptying the grass catcher bag, the acoustic signal may be reactivated when the cutting device are engaged, this is caused by caused by traces of grass remaining attached to the indicator micro-switch sensor; if this happens, disengage and re-engage the cutting device immediately to silence the buzzer.*

Ensure the sensor (fig. 28.E) is always kept free from traces of grass.

6.5.7 Cleaning the discharge chute (*for rear collection models only)*

- Cutting very tall or wet grass, particularly at excessively high speed, can clog up the discharge chute. If it clogs, follow the instructions provided in chap. 7.6.2.

6.5.8 Mowing completed

When mowing has been completed:
1. disengage the cutting device;
2. decrease the engine's r.p.m.
3. drive back with the cutting device assembly in its highest position.

6.6 STOP

To stop the machine:
1. shift the throttle lever to minimum "tortoise" speed position

⚠ ***To avoid backfire, leave the throttle in the minimum "tortoise" speed position for 20 seconds before switching off the engine.***

2. switch off the engine by turning the ignition key to Off;
3. with the engine turned off, close the fuel tap (fig. 25.A) (if provided);
4. remove the key from the ignition

IMPORTANT *To keep the battery charged, do not leave the ignition key in the «on» or «headlights on» position when the engine is not running.*

⚠ ***The engine may be very warm immediately after it is shut off. Do not touch the exhaust or adjacent parts. This can cause burn injuries.***

6.7 AFTER OPERATION

1. Allow the engine to cool before storing in an enclosed space.
2. Clean (par. 7.6).
3. Make sure there are no loose or damaged components. If necessary, replace any damaged components and tighten loose screws or bolts, or contact an Authorised Service Centre.

IMPORTANT

- *Lower the cutting device assembly;*
- *shift into neutral;*
- *engage the parking brake;*
- *stop the engine*
- *remove the ignition key (making sure that all moving parts have come to a complete stop);*

- whenever the machine is left unattended, the operator dismounts from the driving seat or parks the machine;

7. ROUTINE MAINTENANCE

7.1 GENERAL INFORMATION

⚠ ***The safety regulations to follow are described in chap. 2. Strictly comply with these instructions to avoid serious risks or hazards.***

⚠ ***Before conducting any inspections, cleaning or maintenance/adjustment interventions on the machine:***
- ***disengage the cutting device;***
- ***shift into neutral;***
- ***engage the parking brake;***
- ***stop the engine;***
- ***remove the key, (never leave the keys in the ignition or within reach of children or unauthorised persons);***
- ***make sure that all moving parts have come to a complete stop;***
- ***read the relevant instructions;***
- ***use suitable clothing, protective gloves and goggles***

- The frequency and types of maintenance are summarised in the "Maintenance Table". The table will help you maintain your machine's

safety and performance. It lists the main maintenance tasks and how often they need to be performed. Carry out the relevant task as soon as it is scheduled to be performed.

7.2 REFUELLING / EMPTYING THE FUEL TANK

IMPORTANT *Observe the precautions provided in the engine owner's manual. Consult the engine owner's manual for the type of fuel to be used.*

7.2.1 Refuelling

To refuel:
1. Unscrew the fuel tank filler cap and remove it (fig. 30).
2. Insert the funnel (fig. 30).
3. Refuel being careful not to completely fill the tank.
4. Remove the funnel.
5. Close the fuel cap securely after refuelling and clean away any spills.

IMPORTANT *Do not drip petrol onto the plastic parts to avoid ruining them. In the event of accidental leaks, rinse immediately with water. The warranty does not cover for damage to plastic parts of the bodywork or the engine caused by petrol.*

7.2.2 Emptying the fuel tank

NOTE *Fuel is perishable and should not remain in the tank for more than 30 days. Empty the fuel tank before storing the machine for long periods of time (chap. 9).*

⚠ ***Allow the engine to cool before emptying the fuel tank.***

1. Place the machine on a flat surface, in the open air.
2. Place a suitable container under the drain tube (fig. 31.A).
3. Disconnect the tube (fig. 31.A) installed on the fuel filter inlet (fig. 31.B).
4. Open the fuel tap (if provided)
5. Collect the fuel in a suitable container.
6. Reconnect the tube (fig. 31.A) making sure you position the clamp properly (fig. 31.C).
7. Close the fuel tap (if provided).

⚠ ***The next time the machine is used, check that there are no fuel leaks from the tubes, fuel stopcock or carburettor.***

7.3 CHECK, TOP UP, DRAINING OF ENGINE OIL

IMPORTANT *Observe the precautions provided in the engine owner's manual. Consult the engine owner's manual for the type of oil to be used.*

7.3.1 Check/top-up

⚠ ***Always check the oil level before use.***

Procedure:
- Make sure that the machine is level before performing the check.
- Check the oil level: according to the instructions in the engine manual, this must be between the MIN and MAX marks on the dipstick (fig. 32).

⚠ ***Do not overfill as this could cause the engine to overheat. If the oil level exceeds the “MAX” mark, drain until the correct level is achieved.***

7.3.2 Draining

To ensure that the machine functions correctly, and to guarantee a long working life, we recommend changing the engine oil at regular intervals, as indicated in the Owner's Manual supplied with the engine.

⚠ ***The oil may be very hot if removed just after the engine has been switched off. Consequently allow the engine to cool down for a few minutes before proceeding to drain off the oil.***

Replace the engine oil according to the frequency indicated in the engine owner's manual.

Proceed as follows:

- **Type “I”**

1. Place the machine on a flat surface.
2. Place a suitable container under the extension tube (fig. 33.A).
3. Hold the extension tube (fig. 33.A) firmly in place and unscrew the drain plug (fig. 33.B).
4. Collect the oil in a suitable vessel.
5. Replace the drain plug (fig. 33.B) making sure that the gasket is in the right position (fig. 33.C).
6. Fully tighten holding the extension tube firmly in place (fig. 33.A).
7. Clean up any spills.

- **Type “II”**

1. Place the machine on a flat surface.
2. Place a suitable container under the extension tube (fig. 33.D).
3. Detach the extension tube (fig. 33.D) from the support (fig. 33.E) then, using a pair of pliers, loosen the clamp fig. 33.F) until it is possible to extract the drain plug (fig. 33.G).
4. Bend the extension tube and drain the oil into the container.
5. Replace the drain plug (fig. 33.G) and reattach the extension tube (fig. 33.D) to the support (fig. 33.E) before refilling with oil.
6. Clean up any spills.

- **Type “III”**

1. Place the machine on a flat surface.
2. Place a suitable container under the extension tube (fig. 33.A).
3. Press the cotter (fig. 33.B)
4. Release the extension tube from the support by moving it downwards;
5. Bend the extension tube and drain the oil into a suitable container.
6. Refit the extension tube (fig. 33.A) on the support (fig. 33.C) before topping up the oil.
7. Clean up any spills.

IMPORTANT *Hand the spent oil over to a disposal facility in accordance with local provisions.*

7.4 ANTI-SCALPING WHEELS

Thanks to the various mounting positions of the wheels, it is possible to maintain a safety distance “H” between the edge of the cutting device assembly and the ground (fig. 23.A). Adjust the position of the anti-scalping wheels according to how irregular the ground is.

⚠ This should always be performed on both wheels, positioning them at the same height WITH THE ENGINE OFF AND CUTTING device DISENGAGED.

To change the position:

1. Release the arrest plate (fig. 23.B) using a screwdriver and extract the pin (fig. 23.C) with the spring (fig. 23.D).
2. Reposition the wheel (fig. 23.A) in the desired position
3. Replace the pin (fig. 23.C), the spring (fig. 23.D) and the arrest plate (fig. 23.B) in the sequence indicated, making sure that the head of the pin (fig. 23.C) is facing the inside of the machine

7.5 BATTERY

To ensure long life to the battery it is essential to keep it carefully maintained.
The machine battery must always be charged:

- before using the machine for the first time after purchase;
- before leaving the machine disused for a long period (over 30 days) (par. 9);
- before starting up the machine after a prolonged period of inactivity.

Carefully read and observe the battery recharging instructions in the booklet provided with the battery. Failure in following the procedure or in charging the battery could permanently damage the battery elements. A flat battery **must** be recharged as soon as possible.

IMPORTANT *Recharging must be done using a battery charger at constant voltage. Other recharging systems can irreversibly damage the battery.*

- The machine comes with a connector (fig. 34.A) for recharging; this is connected to the corresponding connector for the special maintenance battery charger supplied (if included) or available on request (par. 15.2).

IMPORTANT *This connector must only be used for connection to the maintenance battery charger indicated by the Manufacturer. For its use:*

- *follow the instructions given in the relative instruction manual;*
- *follow the instructions in the battery manual;*

7.6 CLEANING

Clean thoroughly following the instructions below every time it is used.

7.6.1 Cleaning the machine

- Clean the outside of the machine washing the plastic parts of the bodywork with a damp sponge using water and detergent, taking care not to wet the engine, the electrical parts or the electronic circuit board located under the dashboard.
- To reduce fire hazards, keep the engine, silencer, battery compartment and petrol storage area free of grass, leaves, or excessive grease.

IMPORTANT *Never use hose nozzles or harsh detergents for cleaning the body and engine!*

7.6.2 Cleaning the discharge chute (*for rear collection models only)*

If the discharge chute is clogged:
1. remove the grass catcher or the rear discharge guard;
2. remove the grass cuttings; you can reach them from the chute discharge opening.

7.6.3 Cleaning the grass catcher (*for rear collection models only)*

1. Empty the grass catcher
2. Shake it to remove grass cuttings and soil residue
3. Replace the grass catcher and clean the interior of the cutting device assembly (par. 7.6.4-a), now remove the grass catcher, empty and rinse it, then place it where it can dry quickly.

7.6.4 Cleaning the cutting device assembly

⚠ ***Keep people or animals away from the surrounding area when cleaning the cutting device assembly.***

a. Cleaning the interiors

Remove any traces of grass or dirt that have accumulated inside the cutting device assembly, since otherwise these may dry and harden, making it more difficult to start the device the next time.

When washing the inside of the cutting device assembly and the discharge chute, the machine must be on firm ground with:
- the grass catcher or the rear discharge guard mounted in place *(for rear collection models only)*
- the side discharge chute mounted *(for models with side discharge only);*
- the operator seated;
- the cutting device assembly in position «1»;
- the engine running
- the transmission in neutral
- the cutting device engaged

- Alternatively, connect a water tube to the dedicated coupling (fig. 35.A), allowing water to flow through each cutting device for a few minutes, while they are in motion.

IMPORTANT *In order not to compromise the efficiency of the electromagnetic clutch:*
- do not let the clutch come into contact with oil;
- do not spray pressurised water directly on the clutch unit;
- do not clean the clutch with petrol.

b. Cleaning the exterior

⚠ ***Do not let debris and dried grass accumulate in the upper part of the cutting device assembly in order to maintain maximum machine efficiency and safety levels.***

To clean the upper part of the cutting device assembly:
- lower the cutting device assembly completely (position «1»);
- direct an air jet through the apertures in the left and right safety guards (fig. 36).

7.7 NUTS AND BOLTS

- Keep all nuts, bolts and screws tight to be sure the equipment is in safe working condition.

8. EXTRAORDINARY MAINTENANCE

8.1 SAFETY RECOMMENDATIONS

⚠ ***You must go to a Authorised Service Centre or contact your Dealer if the following are malfunctioning:***
- the brake
- the cutting device engage and disengage functions
- switching the drive to forward or reverse gears.

8.2 CUTTING DEVICE ASSEMBLY

8.2.1 Aligning the cutting device assembly

The cutting device assembly should be properly adjusted to obtain an evenly mown lawn (fig. 37).
If mowing is uneven, check the tyre pressure (par. 6.1.3).
If this is not sufficient to achieve an even cut, please contact your Dealer to adjust the alignment of the cutting device assembly.

8.2.2 Cutting device

Badly sharpened cutting device pull at the grass and cause the lawn to turn yellow.

⚠ ***All work on the cutting device (disassembly, sharpening, balancing, repairing, reassembly and/or replacing) are demanding jobs that require special skills as well as special tools. For safety reasons, these jobs are best carried out at a Authorised Service Centre.***

⚠ ***Always replace damaged, bent or worn cutting device, together with their nuts and bolts, in order to ensure they remain balanced.***

IMPORTANT *We strongly recommend changing all the cutting device at the same time, especially in the case of uneven wear.*

IMPORTANT *Always use original cutting device bearing the code indicated in the "Technical Data".*

Given product evolution, the cutting device listed in the "Technical Data" table may be replaced in time with others having similar interchangeable and operating safety features.

8.3 REPLACING FRONT / REAR WHEELS

8.3.1 Preparation

IMPORTANT *Use a suitable lifting device, for example a scissor jack.*

Before changing the wheels it is necessary to complete some preliminary operations:
- Remove all attachments.
- Position the machine on a solid and even surface that guarantees stability of the machine.
- Engage the parking brake;
- Stop the engine;
- Remove the key from the ignition;
- Position the jack in the lifting position near the wheel to be changed (par. 8.3.2; par. 8.3.3).
- Check that the jack is perfectly perpendicular to the ground.

8.3.2 Choice and positioning of the jack on the rear wheels

Position some wooden wedges (fig. 38.A) at the base of the wheel (fig. 38.B) next to the wheel to be changed (fig. 38.C).

For models with rear collection:
- The maximum possible jack height when closed is 110 mm. (fig. 39).
- Position the jack under the rear plate (fig. 40.A) at 180 mm from the side edge.

For side discharge models:
- The maximum possible jack height when closed is 110 mm. (fig. 41).
- Position the jack under the rear axle, in the point indicated in the diagram (fig. 42.A).

NOTE *In this position the jack allows you to only raise the wheel to be changed.*

8.3.3 Choice and positioning of the jack on the front wheels

1. Position some wooden wedges (fig. 43.A) at the base of the wheel (fig. 43.B) behind the wheel to be changed (fig. 43.C).
2. The maximum possible jack height when closed is 110 mm.

NOTE *Select the position of the jack depending on the type of machine.*

3. Position the jack under the front part of the machine (fig. 44.A, 45.A, 46.A) as indicated in the figure.

   NOTE *The jack must be positioned under the flat part of the support (fig. 44.B, 45.B).*

   NOTE *The jack must be positioned under the central rib of the support (fig. 46.B).*

8.3.4 Changing the wheel

IMPORTANT *Make certain the machine remains still and stable during the lifting process. If you notice anything out of the ordinary, lower the jack immediately, check and resolve any problems and lift the machine again.*

1. Slide the cover off (fig. 47.A) before raising the machine.
2. Raise it enough to extract the wheel easily.
3. Using a screwdriver, remove the snap ring (fig. 47.B) and the shoulder washer (fig. 47.C).
4. Remove the wheel to be changed.
5. Coat the axle (fig. 47.D) with lubricating grease.
6. Mount the spare wheel.
7. Carefully replace the shoulder washer and snap ring.
8. Rest the wheel on the ground replace the cover (fig. 47.A).

IMPORTANT *Check that the two rear wheels are the same height (fig. 48.A) and that the difference between the external diameters of the two wheels (fig. 48.B) is no greater than 8-10 mm. On the contrary, to avoid uneven mowing, the cutting device assembly must be aligned by an Authorised Service Centre.*

8.3.5 Repairing or changing tyres

Every replacement or repair of a tyre following a puncture must be performed at a specialist tyre repair centre in accordance with the procedures for the type of tread used.

8.4 ELECTRONIC CIRCUIT BOARD

The electronic circuit board is a component fitted below the dashboard which manages all machine safety devices.

The electronic board is fitted with a self-rearming protection device that interrupts the circuit in the event of a fault on the electrical system; when this device is tripped, it stops the engine and generates an acoustic signal that can only be disabled by removing the key. The circuit is re-armed automatically after a few seconds; identify and eliminate the cause or causes of the fault in order to prevent subsequent interruptions.

IMPORTANT *To avoid tripping the electronic board protection device:*
- *do not invert the battery terminals;*
- *do not operate the machine without the battery, as this would cause the battery charge regulator to function irregularly;*
- *take care to avoid short circuits.*

8.5 REPLACING A FUSE

The machine is fitted with fuses (fig. 49.A) with different capacities and functions. Specifically:
- 10 A fuse = protects the electronic board general and power circuits, when it blows the machine stops running and the dashboard light is extinguished (par. 5.16)
- 25 A fuse = protects the battery recharge circuit. When it blows, the battery gradually runs down and the machine will have problems starting.
- 5 A fuse = protects the auxiliary 12 V power supply socket for the attachments.
- 15 A fuse = protects the command motor circuit, when it blows the electrical grass catcher bag tipping system is disabled; in this condition it is still possible to tip the bag by using the manual lever (if fitted).

The fuse capacity is indicated on the fuse.

IMPORTANT *A blown fuse must always be replaced by one of the same type and amperage and never with one of another rating.*

If you are unable to understand why it has blown contact Your Dealer.

8.6 REPLACING BULBS

8.6.1 Type "I" - Incandescent light bulbs

- The bulbs (18W) have a bayonet fitting and are installed in the bulb holder, which can be taken out by turning it anti-clockwise with pliers (fig. 50).

8.6.2 Type "II" - LED light bulbs

- Loosen the lock nut (fig. 51.A) and remove the connector (fig. 51.B). Remove the LED illuminator (fig. 51.C), secured by screws (fig. 51.D).

8.6.3 Type “III” - LED light bulbs (for TNS, THNS models)

1. Raise the bonnet and remove the connector (fig. 52.A).
2. Detach the cotter pin (fig. 52.B) and slide the bonnet off laterally.
3. Detach the LED light bulb cables (fig. 53.A), undo the screws (fig. 53.B) and release the tabs (fig. 53.C).
4. Raise and release the upper part of the bonnet (fig. 54.A).
5. Undo the screws (fig. 55.A) and replace the LED headlights (fig. 55.B).
6. To replace the bonnet, repeat the above procedure in reverse order.

8.7 REAR DRIVE UNIT

This is a sealed single unit that does not require maintenance. It is permanently lubricated and its lubricant does not need changing or topping up.

8.8 FRONT DRIVE UNIT (4WD MODEL)

This is a sealed single unit that does not require maintenance. It is necessary to check the oil in the hydraulic coupling circuit, top it up and change it at regular intervals.

Check that the oil level in the hydraulic system is between the «MIN» and «MAX» markers on the tank.
If the level is below the «MIN» reference marker (Fig. 56):

- remove the guard (fig. 56.A), which is secured by the nut (fig. 56.B):
- unscrew the plug (fig. 56.C) and top up using 10W30 oil until the level reaches the «MAX» marker:
- replace the plug (fig. 56.C) and the guard (fig. 56.A).

IMPORTANT *If it becomes necessary to top-up the oil level frequently, check the oil tubes and tank for leaks and contact your Dealer for the necessary maintenance.*

8.9 REGULATING THE GRASS CATCHER RETAINING PAWL SPRING

If the grass catcher bag tends to jolt or open unexpectedly while driving over uneven ground, or if it is difficult to recouple the retaining pawl after emptying the bag, it may be necessary to adjust the tension on the spring (fig. 57.A).
Adjust the mounting point by selecting the hole (fig. 57.B) that provides the desired result.

9. STORAGE

When you intend to put your machine away for more than 30 days:

1. Wait for the engine to cool
2. Disconnect the battery cables and store it in a cool and dry place.
3. Empty the fuel tank (par. 7.2.2) and follow all the instructions in the engine manual.
4. Clean the machine thoroughly.
5. Check the machine for any damage. If necessary, contact the Authorised Service Centre.
6. Store the machine:
   - with the cutting device assembly lowered
   - in a dry place
   - protected from inclement weather
   - covered with a sheet where possible (par. 15.4)
   - in a place where children cannot get to it
   - making sure that keys or tools used for maintenance are removed.

Before starting to use the machine again:

- check that there are no fuel leaks from the tubes, fuel stopcock or carburettor:
- prepare the machine as described in chapter "6. Using the machine" .

10. HANDLING AND TRANSPORTATION

- When handling the machine, always:
  - disengage the cutting device;
  - bring the cutting device assembly to the highest position;
  - stop the engine;

- When transporting the machine on a vehicle or trailer, always:
  - use an access ramp of suitable strength, width and length;
  - load the machine with the engine switched off, with the key removed from the ignition, without a driver and pushed by an adequate number of people;
  - close the fuel tap (if provided);
  - lower the cutting -device assembly;
  - engage the parking brake;
  - position it so that it does not cause a hazard to anyone;
  - fasten firmly to the device of transport using ropes or chains to prevent it from tipping over causing damage and fuel leaks.

11. ASSISTANCE AND REPAIRS

This manual provides all the necessary information to run the machine and for correct basic maintenance operations which can be performed by the user. Any regulations and maintenance operations not described herein must be carried out by your Dealer or Authorised Service Centre, which have the necessary knowledge and equipment to ensure that the work is carried out correctly, maintaining the correct degree of safety and the original operating conditions of the machine. Any operations performed in unauthorised centres or by unqualified persons will totally invalidate the Warranty and all obligations and responsibilities of the Manufacturer.

- Only Authorised Service Centres can carry out guaranteed repairs and maintenance.

- Non-original parts and attachments are not approved; use of non-original spare parts and attachments will jeopardise the safety of the machine and relieve the Manufacturer from all obligations or liabilities.
- Genuine spare parts are supplied by Authorised Assistance Centres and Dealers.
- It is advisable to send your machine once a year to an Authorised Service Centre for servicing, assistance and safety device inspection.

12. WARRANTY COVERAGE

The warranty covers all material and manufacturing defects. The user must follow all the instructions provided in the accompanying documentation.
The warranty does not cover damages caused by:

- Failure to become familiar with the documentation accompanying the machine.
- Carelessness.
- Incorrect or prohibited use or assembly.
- Use of non-genuine spare parts.
- Use of attachments not supplied or approved by the manufacturer.

The warranty does not cover:

- Normal wear and tear of consumables, such as drive belts, headlights, wheels, blades, safety bolts and wires.
- Normal wear and tear.
- Engines. Engines are covered by the warranty provided by the relative manufacturer in compliance with the specified terms and conditions.

The purchaser is protected by his own national legislation. The purchaser's rights envisaged by the national laws in his own country are not in any way restricted by this warranty.

13. MAINTENANCE TABLE

Operation	Interval (hours)		Paragraph / Notes
	First time	Subsequently every	
MACHINE			
Safety checks/check controls		Before each use	par. 6.2
Tyre pressure check		Before each use	par. 6.1.3
Check the rear/lateral discharge guards. Check the grass catcher bag and lateral discharge chute.		Before each use	par. 6.1.4
General cleaning and inspection		After each use	par. 7.6
Checking for any damage to the machine. If necessary, contact the Authorised Service Centre.		After each use	-
Charging the battery		Before storage	par. 7.5
Complete bolt and screw check		25	
Cutting device positioning and sharpening check		25	***
Transmission belt check		25	***
Cutting device control belt check		25	***
Brake regulation and check		25	***
Drive regulation and check		25	***
Cutting device gear and brake check		25	***
General lubrication		25	****
Replacing cutting device		100	***
Replacing the transmission belt		-	** / ***
Replacing the cutting device control belt		-	** / ***
ENGINE *			
Checking/topping up fuel level		Before each use	par 7.2
Check/top-up engine oil		Before each use	par 7.3
Replacement of the engine oil		*	*
Air filter cleaning and check		*	*
Air filter replacement		*	*
Fuel filter check		*	*
Fuel filter replacement		*	*
Spark plug points cleaning and check		*	*
Replace the spark plug		*	*

* Consult the manual supplied with the engine for a complete list of maintenance operations and the corresponding intervals
** At the first signs of any malfunction, contact your Dealer immediately
*** The operation must be carried out by your Dealer or a Authorised Service Centre
*** General lubrication of all joints should also be carried out whenever the machine is to be left unused for a long period

14. PROBLEM IDENTIFICATION

PROBLEM	PROBABLE CAUSE	REMEDY
1. When the key is turned to the «ON» position, the dashboard fails to switch on and there is no acoustic signal	The safety device of the electronic circuit board has cut in due to:	Turn the ignition key to «STOP» position and look for the cause of the problem:
	badly connected battery	check the connections (par. 4.4)
	battery terminals inverted	check the connections (par. 4.4).
	flat battery	recharge the battery (par. 7.5)
	fuse blown	replace fuse (10 A) (par. 8.5).
	wet circuit board	dry using lukewarm air
2. When the key is turned to the «ON» position, the dashboard fails to switch on but the acoustic signal is activated	The safety device of the electronic circuit board has cut in due to:	Turn the ignition key to «STOP» position and identify the cause of the problem:
	wet circuit board	dry using lukewarm air
3. With the key on «START» the dashboard is illuminated, but the starter motor does not run	insufficiently charged battery	recharge the battery (par. 7.5)
	battery charger fuse blown	replace fuse (25 A) (par. 8.5)
4. With the key on «START» the starter motor runs but the engine does not start	insufficiently charged battery	recharge the battery (par. 7.5)
	faulty fuel supply	check the level in the tank (par. 7.2.1)
		open the fuel stopcock (if foreseen) (par. 6.4)
		check the fuel filter
	faulty ignition	check that the spark plug cap is securely fitted
		check that the electrodes are clean and have the correct gap
5. Starting is difficult or the engine runs erratically	carburation problems	clean or replace the air filter
		empty the fuel tank and refill with fresh fuel
		check and replace the fuel filter if necessary
6. Weak engine performance during cutting	forward speed too high in relation to cutting height	reduce the forward speed and/or raise the cutting height (par. 6.5.4)
7. The engine stops when the cutting device are engaged	engage not enabled	check that all starting conditions are met (par. 6.2.2)
8. The battery indicator light remains on even after the machine has been running for a few minutes	insufficient battery charge	contact your Dealer
9. The oil indicator light switches on during operation (if fitted)	engine lubrication problems	Turn the key to the «STOP» position immediately:
		top-up the oil level (see 7.3.1)
		replace the filter (if the problem persists, contact your Dealer)

If problems persist after having performed the above operations, contact your Dealer.

PROBLEM	PROBABLE CAUSE	REMEDY
10. The engine stops running and an acoustic signal is generated	The safety device of the electronic circuit board has cut in due to:	Turn the ignition key to «STOP» position and identify the cause of the problem:
	over-voltage caused by the charger regulator	contact your Dealer
	battery not connected correctly (poor contacts)	check the connections (see 3.4)
11. The engine stops running, and no acoustic signal is generated	battery disconnected	check the connections (see 3.4)
	engine problems	contact your Dealer
12. The cutting device do not engage or do not stop promptly when they are disengaged	loose belt	contact your Dealer
	problems with the electro-magnetic clutch	contact your Dealer
13. Uneven mowing and insufficient collection (for rear collection models only)	cutting device assembly is not parallel to the ground	check the tyre pressure (par. 6.1.3)
		reinstate the alignment of the cutting device assembly in relation to the ground (par. 8.2.1)
	inefficient cutting device	contact your Dealer
	forward speed too high compared to height of grass	reduce the forward speed and/or raise the cutting device assembly (par. 6.5.4)
		wait for the grass to dry
	collector chute is blocked	remove the grass catcher bag and empty the chute (see 7.6.2)
14. Uneven mowing (side discharge models only)	cutting device assembly is not parallel to the ground	check the tyre pressure (par. 6.1.3)
		reinstate the alignment of the cutting device assembly in relation to the ground (par. 8.2.1)
	inefficient cutting device	contact your Dealer
15. Unusual vibrations while working	cutting device assembly is full of grass	clean the cutting device assembly (par. 7.6.4)
	the cutting device are unbalanced or loose	contact your Dealer
	loose bolts and screws	check and tighten all the engine and frame bolts
16. Uncertain or ineffective braking	the brake is not adjusted correctly	contact your Dealer
17. Erratic forward movement, poor drive when going uphill or if the machine has a tendency to rear up	problems with the belt or the engagement device	contact your Dealer
18. When the engine is running, the machine remains stationary when the drive pedal is pressed	release lever in the gear disengagement position	return it to the gear engaged position (par. 5.4)

If problems persist after having performed the above operations, contact your Dealer.

PROBLEM	PROBABLE CAUSE	REMEDY
19. Unusual machine vibrations	damaged or loose parts	stop the machine and remove the ignition key
		inspect for damage
		check for and tighten any loose parts
		have all checks, repair work and replacements carried out by a Authorised Service Centre only

If problems persist after having performed the above operations, contact your Dealer.

15. ATTACHMENTS

15.1 "MULCHING" KIT

It finely chops the grass cuttings and leaves them on the lawn (fig. 58.A1; fig 58.A2).

15.2 MAINTENANCE BATTERY CHARGER

This keeps the battery in good working order when the machine is in storage, guaranteeing an optimum level of charge and longer battery life (fig. 58.B).

15.3 TOWING KIT

To tow a small trailer (fig. 58.C).

15.4 CANVAS COVER

Protects the machine from dust when not in use (fig. 58.D)

15.5 REAR WEIGHT KIT

They improve the rear stability of the machine, especially when used mainly on sloping ground (Figure 58.E).

15.6 REAR DISCHARGE GUARD KIT

To be used in place of the grass catcher when mown grass is not collected (Fig. 58.F). ***(For rear discharge models only).***

15.7 SNOW CHAINS 18'', 20''

Improved adherence of the rear wheels on the snow-covered sections and possibility of using snow ploughs (Fig. 58.G).

15.8 MUD / SNOW WHEELS 18’’, 20’’

Improve drive performance on snow and mud (Figure 58.H).

15.9 TRAILER

To transport tools or tall objects within permitted load limits (Fig. 58.I).

15.10 SPRINKLER

To spread salt or fertilizers (Fig. 58.J).

15.11 SPRINKLER

To spread sand or gravel (Fig. 58.K).

15.12 GRASS ROLLER

To compact the soil after sowing or to flatten grass (Fig. 58.L).

15.13 SNOW BLADE

For ploughing and accumulating removed snow at sides (Fig. 58.M).

15.14 FRONT SWEEPER

To clean leaves and dirt from paths and solid surfaces and remove thin layers of fresh snow (Fig. 58.N).

15.15 SHREDDER

Cutting and shredding rough grass (Fig. 58.O).

15.16 LEAF AND GRASS COLLECTOR

To collect leaves and grass from grassy areas (Fig. 58.P).

15.17 FRONT RAKE

To collect grass and twigs (Fig. 58.Q).

15.18 LIFTING INTERFACE

Used to mount additional front accessories that do not require using the power take-off (Fig. 58.R1).

15.19 POWER TAKE-OFF (PTO)

Used for transferring the engine power to an attachment. Lifting interface is required (Fig. 58.R2).

15.20 POWER TAKE-OFF (PTO)

Used for transferring the engine power to an attachment. Lifting interface is not required (Fig. 58.R3).

DICHIARAZIONE CE DI CONFORMITÀ (Istruzioni Originali)
(Direttiva Macchine 2006/42/CE, Allegato II, parte A)

1. La Società: ST. S.p.A. – Via del Lavoro, 6 – 31033 Castelfranco Veneto (TV) – Italy
2. Dichiara sotto la propria responsabilità, che la macchina:

Tosaerba con conducente a bordo seduto (taglio erba)

a) Tipo / Modello Base:	T•••• 92 Hydro
c) Numero di Serie:	22A••RON000001 ÷ 99L••RON999999
d) Motore:	a scoppio

3. È conforme alle specifiche delle direttive:
   - MD: 2006/42/EC
   - OND: 2000/14/EC, ANNEX VI - 2005/88/EC
     D. Lgs.262/2002, ANNEX VI, proc. 1 (Italy)
     e) Ente certificatore: N. 0197 – TÜV Rheinland LGA Products GmbH
     Tillystrasse 2, 90431 Nürnberg – Germany
   - EMCD: 2014/30/EU
   - RoHS II: 2011/65/EU - 2015/863/EU

4. Riferimento alle norme armonizzate:
   EN ISO 5395-1:2013 + A1:2018
   EN ISO 5395-3:2013 + A1:2017 + A2:2018
   EN 55012:2007 + A1:2009
   EN ISO 14982:2009
   EN 63000:2018

g) Livello di potenza sonora misurato:	99 dB(A)
h) Livello di potenza sonora garantito:	100 dB(A)
i) Ampiezza di taglio:	88 cm

n) Persona autorizzata a costituire il Fascicolo Tecnico: ST. S.p.A.
Via del Lavoro, 6
31033 Castelfranco Veneto (TV) - Italia

o) Castelfranco Veneto, 01/10/2022

CEO Stiga Group

Sean Robinson

UK DECLARATION OF CONFORMITY

(Supply of Machinery (Safety) Regulations 2008, S.I. 2008 No. 1597, Annex II, part A)

1. The company: ST. S.p.A. – Via del Lavoro, 6 – 31033 Castelfranco Veneto (TV) – Italy
2. Hereby declares under its own responsibility that the machine:

Ride-on lawnmower with seated operator (grass cutting)

a) Homologation type:	T•••• 92 Hydro
c) Serial number:	22A••RON000001 ÷ 99L••RON999999
d) Engine:	petrol

3. Conforms to UK Regulations:
   - S.I. 2008/1597 - Supply of Machinery (Safety) Regulations 2008
   - S.I. 2001/1701 - Schedule 9 - Noise Emission in the Environment by Equipment for use Outdoors Regulations 2001

     e) Notified body: N. 0197 – TÜV Rheinland LGA Products GmbH
     Tillystrasse 2, 90431 Nürnberg – Germany
   - S.I. 2016/1091 - Electromagnetic Compatibility Regulations 2016
   - S.I. 2012/3032 - The Restriction of the Use of Certain Hazardous Substances in Electrical and Electronic Equipment Regulations 2012

4. Reference to harmonised standards:
   EN ISO 5395-1:2013 + A1:2018
   EN ISO 5395-3:2013 + A1:2017 + A2:2018
   EN 55012:2007 + A1:2009
   EN ISO 14982:2009
   EN 63000:2018

g) Measured sound power level:	99 dB(A)
h) Guaranteed sound power level:	100 dB(A)
i) Cutting width:	88 cm

n) Person authorised to compile the technical file:	ST. S.p.A. Via del Lavoro, 6 31033 Castelfranco Veneto (TV) - Italia
o) Castelfranco Veneto, 01/10/2022	CEO Stiga Group Sean Robinson

UK Importer: STIGA LTD
Unit 8, Bluewater Estate Plympton,
Devon, PL7 4JH, England

UK CA

DICHIARAZIONE CE DI CONFORMITÀ (Istruzioni Originali)
(Direttiva Macchine 2006/42/CE, Allegato II, parte A)

1. La Società: ST. S.p.A. – Via del Lavoro, 6 – 31033 Castelfranco Veneto (TV) – Italy
2. Dichiara sotto la propria responsabilità, che la macchina:

Tosaerba con conducente a bordo seduto (taglio erba)

a) Tipo / Modello Base:	T•••• 102 - T••••• 102 Hydro
c) Numero di Serie:	22A••RON000001 ÷ 99L••RON999999
d) Motore:	a scoppio

3. È conforme alle specifiche delle direttive:
   - MD: 2006/42/EC
   - OND: 2000/14/EC, ANNEX VI - 2005/88/EC
     D. Lgs.262/2002, ANNEX VI, proc. 1 (Italy)
     e) Ente certificatore: N. 0197 – TÜV Rheinland LGA Products GmbH
     Tillystrasse 2, 90431 Nürnberg – Germany
   - EMCD: 2014/30/EU
   - RoHS II: 2011/65/EU - 2015/863/EU

4. Riferimento alle norme armonizzate:
   EN ISO 5395-1:2013 + A1:2018
   EN ISO 5395-3:2013 + A1:2017 + A2:2018
   EN 55012:2007 + A1:2009
   EN ISO 14982:2009
   EN 63000:2018

g) Livello di potenza sonora misurato:	100 dB(A)
h) Livello di potenza sonora garantito:	100 dB(A)
i) Ampiezza di taglio:	101 cm

n) Persona autorizzata a costituire il Fascicolo Tecnico: ST. S.p.A.
Via del Lavoro, 6
31033 Castelfranco Veneto (TV) - Italia

o) Castelfranco Veneto, 01/10/2022

CEO Stiga Group

Sean Robinson

UK DECLARATION OF CONFORMITY

(Supply of Machinery (Safety) Regulations 2008, S.I. 2008 No. 1597, Annex II, part A)

1. The company: ST. S.p.A. – Via del Lavoro, 6 – 31033 Castelfranco Veneto (TV) – Italy
2. Hereby declares under its own responsibility that the machine:

Ride-on lawnmower with seated operator (grass cutting)

a) Homologation type:	T•••• 102 - T••••• 102 Hydro
c) Serial number:	22A••RON000001 ÷ 99L••RON999999
d) Engine:	petrol

3. Conforms to UK Regulations:
   - S.I. 2008/1597 - Supply of Machinery (Safety) Regulations 2008
   - S.I. 2001/1701 - Schedule 9 - Noise Emission in the Environment by Equipment for use Outdoors Regulations 2001

     e) Notified body: N. 0197 – TÜV Rheinland LGA Products GmbH
     Tillystrasse 2, 90431 Nürnberg – Germany
   - S.I. 2016/1091 - Electromagnetic Compatibility Regulations 2016
   - S.I. 2012/3032 - The Restriction of the Use of Certain Hazardous Substances in Electrical and Electronic Equipment Regulations 2012

4. Reference to harmonised standards:
   EN ISO 5395-1:2013 + A1:2018
   EN ISO 5395-3:2013 + A1:2017 + A2:2018
   EN 55012:2007 + A1:2009
   EN ISO 14982:2009
   EN 63000:2018

g) Measured sound power level:	100 dB(A)
h) Guaranteed sound power level:	100 dB(A)
i) Cutting width:	101 cm

n) Person authorised to compile the technical file:	ST. S.p.A. Via del Lavoro, 6 31033 Castelfranco Veneto (TV) - Italia
o) Castelfranco Veneto, 01/10/2022	CEO Stiga Group Sean Robinson

UK Importer: STIGA LTD
Unit 8, Bluewater Estate Plympton,
Devon, PL7 4JH, England

UK CA

DICHIARAZIONE CE DI CONFORMITÀ (Istruzioni Originali)
(Direttiva Macchine 2006/42/CE, Allegato II, parte A)

1. La Società: ST. S.p.A. – Via del Lavoro, 6 – 31033 Castelfranco Veneto (TV) – Italy
2. Dichiara sotto la propria responsabilità, che la macchina:

Tosaerba con conducente a bordo seduto (taglio erba)

a) Tipo / Modello Base:	T••• 108 Hydro - T••• 108 Hydro SD
c) Numero di Serie:	22A••RON000001 ÷ 99L••RON999999
d) Motore:	a scoppio

3. È conforme alle specifiche delle direttive:
   - MD: 2006/42/EC
   - OND: 2000/14/EC, ANNEX VI - 2005/88/EC
     D. Lgs.262/2002, ANNEX VI, proc. 1 (Italy)
     e) Ente certificatore: N. 0197 – TÜV Rheinland LGA Products GmbH
     Tillystrasse 2, 90431 Nürnberg – Germany
   - EMCD: 2014/30/EU
   - RoHS II: 2011/65/EU - 2015/863/EU

4. Riferimento alle norme armonizzate:
   EN ISO 5395-1:2013 + A1:2018
   EN ISO 5395-3:2013 + A1:2017 + A2:2018
   EN 55012:2007 + A1:2009
   EN ISO 14982:2009
   EN 63000:2018

g) Livello di potenza sonora misurato:	100 dB(A)
h) Livello di potenza sonora garantito:	100 dB(A)
i) Ampiezza di taglio:	105 cm

n) Persona autorizzata a costituire il Fascicolo Tecnico: ST. S.p.A.
Via del Lavoro, 6
31033 Castelfranco Veneto (TV) - Italia

o) Castelfranco Veneto, 01/10/2022

CEO Stiga Group

Sean Robinson

UK DECLARATION OF CONFORMITY

(Supply of Machinery (Safety) Regulations 2008, S.I. 2008 No. 1597, Annex II, part A)

1. The company: ST. S.p.A. – Via del Lavoro, 6 – 31033 Castelfranco Veneto (TV) – Italy
2. Hereby declares under its own responsibility that the machine:

Ride-on lawnmower with seated operator (grass cutting)

a) Homologation type:	T••• 108 Hydro - T••• 108 Hydro SD
c) Serial number:	22A••RON000001 ÷ 99L••RON999999
d) Engine:	petrol

3. Conforms to UK Regulations:
   - S.I. 2008/1597 - Supply of Machinery (Safety) Regulations 2008
   - S.I. 2001/1701 - Schedule 9 - Noise Emission in the Environment by Equipment for use Outdoors Regulations 2001

     e) Notified body: N. 0197 – TÜV Rheinland LGA Products GmbH
     Tillystrasse 2, 90431 Nürnberg – Germany
   - S.I. 2016/1091 - Electromagnetic Compatibility Regulations 2016
   - S.I. 2012/3032 - The Restriction of the Use of Certain Hazardous Substances in Electrical and Electronic Equipment Regulations 2012

4. Reference to harmonised standards:
   EN ISO 5395-1:2013 + A1:2018
   EN ISO 5395-3:2013 + A1:2017 + A2:2018
   EN 55012:2007 + A1:2009
   EN ISO 14982:2009
   EN 63000:2018

g) Measured sound power level:	100 dB(A)
h) Guaranteed sound power level:	100 dB(A)
i) Cutting width:	105 cm

n) Person authorised to compile the technical file:	ST. S.p.A. Via del Lavoro, 6 31033 Castelfranco Veneto (TV) - Italia
o) Castelfranco Veneto, 01/10/2022	CEO Stiga Group Sean Robinson

UK Importer: STIGA LTD
Unit 8, Bluewater Estate Plympton,
Devon, PL7 4JH, England

UK CA

DICHIARAZIONE CE DI CONFORMITÀ (Istruzioni Originali)
(Direttiva Macchine 2006/42/CE, Allegato II, parte A)

1. La Società: ST. S.p.A. – Via del Lavoro, 6 – 31033 Castelfranco Veneto (TV) – Italy
2. Dichiara sotto la propria responsabilità, che la macchina:

Tosaerba con conducente a bordo seduto (taglio erba)

a) Tipo / Modello Base:	T••••• 118 Hydro SD
c) Numero di Serie:	22A••RON000001 ÷ 99L••RON999999
d) Motore:	a scoppio

3. È conforme alle specifiche delle direttive:
   - MD: 2006/42/EC
   - OND: 2000/14/EC, ANNEX VI - 2005/88/EC
     D. Lgs.262/2002, ANNEX VI, proc. 1 (Italy)
     e) Ente certificatore: N. 0197 – TÜV Rheinland LGA Products GmbH
     Tillystrasse 2, 90431 Nürnberg – Germany
   - EMCD: 2014/30/EU
   - RoHS II: 2011/65/EU - 2015/863/EU

4. Riferimento alle norme armonizzate:
   EN ISO 5395-1:2013 + A1:2018
   EN ISO 5395-3:2013 + A1:2017 + A2:2018
   EN 55012:2007 + A1:2009
   EN ISO 14982:2009
   EN 63000:2018

g) Livello di potenza sonora misurato:	105 dB(A)
h) Livello di potenza sonora garantito:	105 dB(A)
i) Ampiezza di taglio:	121 cm

n) Persona autorizzata a costituire il Fascicolo Tecnico: ST. S.p.A.
Via del Lavoro, 6
31033 Castelfranco Veneto (TV) - Italia

o) Castelfranco Veneto, 01/10/2022

CEO Stiga Group

Sean Robinson

UK DECLARATION OF CONFORMITY

(Supply of Machinery (Safety) Regulations 2008, S.I. 2008 No. 1597, Annex II, part A)

1. The company: ST. S.p.A. – Via del Lavoro, 6 – 31033 Castelfranco Veneto (TV) – Italy
2. Hereby declares under its own responsibility that the machine:

Ride-on lawnmower with seated operator (grass cutting)

a) Homologation type:	T••••• 118 Hydro SD
c) Serial number:	22A••RON000001 ÷ 99L••RON999999
d) Engine:	petrol

3. Conforms to UK Regulations:
   - S.I. 2008/1597 - Supply of Machinery (Safety) Regulations 2008
   - S.I. 2001/1701 - Schedule 9 - Noise Emission in the Environment by Equipment for use Outdoors Regulations 2001

     e) Notified body: N. 0197 – TÜV Rheinland LGA Products GmbH
     Tillystrasse 2, 90431 Nürnberg – Germany
   - S.I. 2016/1091 - Electromagnetic Compatibility Regulations 2016
   - S.I. 2012/3032 - The Restriction of the Use of Certain Hazardous Substances in Electrical and Electronic Equipment Regulations 2012

4. Reference to harmonised standards:
   EN ISO 5395-1:2013 + A1:2018
   EN ISO 5395-3:2013 + A1:2017 + A2:2018
   EN 55012:2007 + A1:2009
   EN ISO 14982:2009
   EN 63000:2018

g) Measured sound power level:	105 dB(A)
h) Guaranteed sound power level:	105 dB(A)
i) Cutting width:	121 cm

n) Person authorised to compile the technical file:	ST. S.p.A. Via del Lavoro, 6 31033 Castelfranco Veneto (TV) - Italia
o) Castelfranco Veneto, 01/10/2022	CEO Stiga Group Sean Robinson

UK Importer: STIGA LTD
Unit 8, Bluewater Estate Plympton,
Devon, PL7 4JH, England

UK CA

DICHIARAZIONE CE DI CONFORMITÀ (Istruzioni Originali)
(Direttiva Macchine 2006/42/CE, Allegato II, parte A)

1. La Società: ST. S.p.A. – Via del Lavoro, 6 – 31033 Castelfranco Veneto (TV) – Italy
2. Dichiara sotto la propria responsabilità, che la macchina:

Tosaerba con conducente a bordo seduto (taglio erba)

a) Tipo / Modello Base:	T•••• 122 - T••••• 122 Hydro
c) Numero di Serie:	22A••RON000001 ÷ 99L••RON999999
d) Motore:	a scoppio

3. È conforme alle specifiche delle direttive:
   - MD: 2006/42/EC
   - OND: 2000/14/EC, ANNEX VI - 2005/88/EC
     D. Lgs.262/2002, ANNEX VI, proc. 1 (Italy)
     e) Ente certificatore: N. 0197 – TÜV Rheinland LGA Products GmbH
     Tillystrasse 2, 90431 Nürnberg – Germany
   - EMCD: 2014/30/EU
   - RoHS II: 2011/65/EU - 2015/863/EU

4. Riferimento alle norme armonizzate:
   EN ISO 5395-1:2013 + A1:2018
   EN ISO 5395-3:2013 + A1:2017 + A2:2018
   EN 55012:2007 + A1:2009
   EN ISO 14982:2009
   EN 63000:2018

g) Livello di potenza sonora misurato:	104 dB(A)
h) Livello di potenza sonora garantito:	105 dB(A)
i) Ampiezza di taglio:	121 cm

n) Persona autorizzata a costituire il Fascicolo Tecnico: ST. S.p.A.
Via del Lavoro, 6
31033 Castelfranco Veneto (TV) - Italia

o) Castelfranco Veneto, 01/10/2022

CEO Stiga Group

Sean Robinson

UK DECLARATION OF CONFORMITY

(Supply of Machinery (Safety) Regulations 2008, S.I. 2008 No. 1597, Annex II, part A)

1. The company: ST. S.p.A. – Via del Lavoro, 6 – 31033 Castelfranco Veneto (TV) – Italy
2. Hereby declares under its own responsibility that the machine:

Ride-on lawnmower with seated operator (grass cutting)

a) Homologation type:	T•••• 122 - T••••• 122 Hydro
c) Serial number:	22A••RON000001 ÷ 99L••RON999999
d) Engine:	petrol

3. Conforms to UK Regulations:
   - S.I. 2008/1597 - Supply of Machinery (Safety) Regulations 2008
   - S.I. 2001/1701 - Schedule 9 - Noise Emission in the Environment by Equipment for use Outdoors Regulations 2001

     e) Notified body: N. 0197 – TÜV Rheinland LGA Products GmbH
     Tillystrasse 2, 90431 Nürnberg – Germany
   - S.I. 2016/1091 - Electromagnetic Compatibility Regulations 2016
   - S.I. 2012/3032 - The Restriction of the Use of Certain Hazardous Substances in Electrical and Electronic Equipment Regulations 2012

4. Reference to harmonised standards:
   EN ISO 5395-1:2013 + A1:2018
   EN ISO 5395-3:2013 + A1:2017 + A2:2018
   EN 55012:2007 + A1:2009
   EN ISO 14982:2009
   EN 63000:2018

g) Measured sound power level:	104 dB(A)
h) Guaranteed sound power level:	105 dB(A)
i) Cutting width:	121 cm

n) Person authorised to compile the technical file:	ST. S.p.A. Via del Lavoro, 6 31033 Castelfranco Veneto (TV) - Italia
o) Castelfranco Veneto, 01/10/2022	CEO Stiga Group Sean Robinson

UK Importer: STIGA LTD
Unit 8, Bluewater Estate Plympton,
Devon, PL7 4JH, England

UK CA

171512696/11

FR (Traduction de la notice originale) **Déclaration CE de Conformité** **(Directive Machines 2006/42/CE, Annexe II, partie A)** **1. La Société** **2. Déclare sous sa propre responsabilité que la machine : Tondeuse à gazon à conducteur assis/ coupe du gazon** **a) Type / Modèle de Base** **c) Série** **d) Moteur: moteur essence** **3. Est conforme aux prescriptions des directives :** **e) Organisme de certification** **4. Renvoi aux Normes harmonisées** **g) Niveau de puissance sonore mesuré** **h) Niveau de puissance sonore garanti** **i) Largeur de coupe** **n) Personne habilitée à établir le Dossier Technique :** **o) Lieu et Date**	**EN** (Translation of the original instruction) **EC Declaration of Conformity** **(Machine Directive 2006/42/EC, Annex II, part A)** **1. The Company** **2. Herby declares under its own responsibility that the machine: ride-on lawnmower with seated operator/ Grass cutting** **a) Type / Base Model** **c) Serial number** **d) Motor: petrol** **3. Conforms to directive specifications:** **e) Certifying body** **4. Reference to harmonised Standards** **g) Sound power level measured** **h) Sound power level guaranteed** **i) Range of cut** **n) Person authorised to create the Technical Folder:** **o) Place and Date**	**DE** (Übersetzung der Originalbetriebsanleitung) **EG-Konformitätserklärung** **(Maschinenrichtlinie 2006/42/EG, Anhang II, Teil A)** **1. Die Gesellschaft** **2. Erklärt auf eigene Verantwortung, dass die Maschine: Aufsitzmäher / Rasenschnitt** **a) Typ / Basismodell** **c) Seriennummer** **d) Motor: Verbrennungsmotor** **3. Den Anforderungen der folgenden Richtlinien entspricht:** **e) Zertifizierungsstelle** **4. Bezugnahme auf die harmonisierten Normen** **g) Gemessener Schallleistungspegel** **h) Garantierter Schallleistungspegel** **i) Schnittbreite** **n) Zur Verfassung der technischen Unterlagen befugte Person:** **o) Ort und Datum**
NL (Vertaling van de oorspronkelijke gebruiksaanwijzing) **EG-verklaring van overeenstemming** **(Richtlijn Machines 2006/42/CE, Bijlage II, deel A)** **1. Het bedrijf** **2. Verklaart onder zijn eigen verantwoordelijkheid dat de machine: Grasmaaier met zittende bediener / grasmaaier** **a) Type / Basismodel** **c) Serienummer** **d) Motor: benzinemotor** **3. Voldoet aan de specificaties van de richtlijnen:** **e) Certificatie-instituut** **4. Verwijzing naar de Geharmoniseerde normen** **g) Gemeten niveau van geluidsvermogen** **h) Gegarandeerd niveau van geluidsvermogen** **i) Snijbreedte** **n) Bevoegd persoon voor het opstellen van het Technisch Dossier** **o) Plaats en Datum**	**ES** (Traducción del Manual Original) **Declaración de Conformidad CE** **(Directiva Máquinas 2006/42/CE, Anexo II, parte A)** **1. La Empresa** **2. Declara bajo su propia responsabilidad que la máquina: Cortadora de pasto con conductor sentado/ Corte hierba** **a) Tipo / Modelo Base** **c) Matrícula** **d) Motor: motor de explosión** **3. Cumple con las especificaciones de las directivas:** **e) Ente certificador** **4. Referencia a las Normas armonizadas** **g) Nivel de potencia sonora medido** **h) Nivel de potencia sonora garantizado** **i) Amplitud de corte** **n) Persona autorizada a realizar el Manual Técnico:** **o) Lugar y Fecha**	**PT** (Tradução do manual original) **Declaração CE de Conformidade** **(Diretiva de Máquinas 2006/42/CE, Anexo II, parte A)** **1. A Empresa** **2. Declara sob a própria responsabilidade que a máquina: Corta-relvas para operador sentado/ corte da relva** **a) Tipo / Modelo Base** **c) Matrícula** **d) Motor: motor a explosão** **3. É conforme às especificações das diretivas:** **e) Órgão certificador** **4. Referência às Normas harmonizadas** **g) Nível medido de potência sonora** **h) Nível garantido de potência sonora** **i) Amplitude de corte** **n) Pessoa autorizada a elaborar o Caderno Técnico** **o) Local e Data**
EL (Μετάφραση του πρωτοτύπου των οδηγιών χρήσης) **ΕΚ-Δήλωση συμμόρφωσης** **(Οδηγία Μηχανών 2006/42/CE, Παράρτημα II, μέρος Α)** **1. Η Εταιρία** **2. Δηλώνει υπεύθυνα ότι η μηχανή: Χλοοκοπτικό τρακτέρ με εποχούμενο χειριστή/ κοπή της χλόης** **a) Τύπος / Βασικό Μοντέλο** **c) Αριθμός μητρώου** **d) Κινητήρας: κινητήρας εσωτερικής ανάφλεξης** **3. Συμμορφώνεται με τις προδιαγραφές της οδηγίας:** **e) Οργανισμός πιστοποίησης** **4. Αναφορά στους Κανονισμούς εναρμόνισης** **g) Στάθμη μέτρησης ακουστικής ισχύος** **h) Στάθμη εγγυημένης ακουστικής ισχύος** **i) Εύρος κοπής** **n) Εξουσιοδοτημένο άτομο για την κατάρτιση του Τεχνικού Φυλλαδίου:** **o) Τόπος και Χρόνος**	**TR** (Orijinal Talimatların Tercümesi) **AT Uygunluk Beyanı** **(2006/42/CE Makine Direktifi, Ek II, bölüm A)** **1. Şirket** **2. Şahsi sorumluluğu altında aşağıdaki makinenin: Oturan sürücülü çim biçme makinesi / çim kesimi** **a) Tip / Standart model** **c) Sicil numarası** **d) Motor: patlamalı motor** **3. Aşağıdaki direktiflerin özelliklerine uygun olduğunu beyan etmektedir:** **e) Sertifikalandıran kurum** **4. Harmonize standartlara atıf** **g) Ölçülen ses güç seviyesi** **h) Garanti edilen ses güç seviyesi** **i) Kesim genişliği** **n) Teknik Dosyayı oluşturmaya yetkili kişi:** **o) Yer ve Tarih**	**MK** (Превод на оригиналните упатства) **Декларација за усогласеност со ЕУ** **(Директива за машини 2006/42/CE, Анекс II, дел А)** **1. Компанијата** **2. изјавува со целосна лична одговорност дека следната машина: Тревокосачка со седнат управувач / косење трева** **а) Тип / основен модел** **в) етикета** **г) мотор: мотор со согорување** **3. Усогласено со спецификациите според директивите:** **д) тело за сертификација** **4. Референци за усогласени нормативи** **е) Акустички притисок** **ж) измерено ниво на звучна моќност** **з) Ниво на гарантирана звучна моќност** **н) овластено лице за составување на Техничката брошура** **о) место и датум**

NO (Oversettelse av orginal bruksanvisning) **EF- Samsvarserklæring** **(Maskindirektiv 2006/42/EF, Vedlegg II, del A)** **1. Firmaet** **2. Erklærer på eget ansvar at maskinen: Sittegressklipper / gressklipping** **a) Type / Modell** **c) Serienummer** **d) Motor: forbrenningsmotor** **3. Oppfyller kravene i direktivene:** **e) Sertifiseringsorgan** **4. Henvisning til harmoniserte standarder** **g) Målt lydeffektnivå** **h) Garantert lydeffektnivå** **i) Klippebredde** **n) Person som har fullmakt til å utferdige teknisk dokumentasjon:** **o) Sted og dato**	**SV** (Översättning av bruksanvisning i original) **EG-försäkran om överensstämmelse** **(Maskindirektiv 2006/42//EG, bilaga II, de la)** **1. Företaget** **2. Försäkrar på eget ansvar att maskinen Ákgräsklippare / gräsklippning** **a) Typ / Basmodell** **c) Serienummer** **d) Motor: förbränningsmotor** **3. Överensstämmer med föreskrifterna i direktivet** **e) Intygsorgan_ Anmält organ** **4. Referens till harmoniserade standarder** **g) Uppmätt ljudeffektnivå** **h) Garanterad ljudeffektnivå** **i) Skärbredd** **n) Auktoriserad person för upprättandet av den tekniska dokumentationen:** **o) Ort och datum**	**DA** (Oversættelse af den originale brugsanvisning) **EF-overensstemmelseserklæring** **(Maskindirektiv 2006/42/EF, bilag II, del A)** **1. Firmaet** **2. Erklærer på eget ansvar, at maskinen: Havetraktor/ klipning af græsset** **a) Type / Model** **c) Serienummer** **d) Motor: forbrændingsmotor** **3. Er i overensstemmelse med specifikationerne ifølge direktiverne:** **e) Certificeringsorgan** **4. Henvisning til harmoniserede standarder** **g) Målt lydeffektniveau** **h) Garanteret lydeffektniveau** **i) Klippebredde** **n) Person, der har bemyndigelse til at udarbejde det tekniske dossier:** **o) Sted og dato**
FI (Alkuperäisten ohjeiden käännös) **EY-VAATIMUSTENMUKAISUUSVAKUUTUS** **(Konedirektiivi 2006/42/EY, Liite II, osa A)** **1. Yritys** **2. Vakuuttaa omalla vastuullaan, että kone: Päältäajettava ruohonleikkuri / ruohonleikkuu** **a) Tyyppi / Perusmalli** **c) Sarjanumero** **d) Moottori : räjähdysmoottori** **3. On yhdenmukainen seuraavien direktiivien asettamien vaatimusten kanssa:** **e) Sertifiointiyritys** **4. Viittaus harmonisoituihin standardeihin** **g) Mitattu äänitehotaso** **h) Taattu äänitehotaso** **i) Leikkuuleveys** **n) Teknisten asiakirjojen laatimiseen valtuutettu henkilö:** **o) Paikka ja päivämäärä**	**CS** (Překlad původního návodu k používání) **ES – Prohlášení o shodě** **(Směrnice o Strojních zařízeních 2006/42/ES, Příloha II, část A)** **1. Společnost** **2. Prohlašuje na vlastní odpovědnost, že stroj: Sekačka se sedící obsluhou/ sekačka na trávu** **a) Typ / Základní model** **c) Výrobní číslo** **d) Motor: spalovací motor** **3. Je ve shodě s nařízeními směrnic:** **e) Certifikační orgán** **4. Odkazy na Harmonizované normy** **g) Naměřená úroveň akustického výkonu** **h) Zaručená úroveň akustického výkonu** **i) Šířka řezání** **n) Osoba autorizovaná pro vytvoření Technického spisu:** **o) Místo a Datum**	**PL** (Tłumaczenie instrukcji oryginalnej) **Deklaracja zgodności WE** **(Dyrektywa maszynowa 2006/42/WE, Załącznik II, część A)** **1. Spółka** **2. Oświadcza na własną odpowiedzialność, że maszyna: Kosiarka z operatorem jadącym, w pozycji siedzącej na maszynie/ cięcie trawy** **a) Typ / Model podstawowy** **c) Numer seryjny** **d) Silnik: silnik o zapłonie iskrowym** **3. Spełnia podstawowe wymogi następujących Dyrektyw:** **e) Jednostka certyfikująca** **4. Odniesienie do Norm zharmonizowanych** **g) Zmierzony poziom mocy akustycznej** **h) Gwarantowany poziom mocy akustycznej** **i) Szerokość cięcia** **n) Osoba upoważniona do zredagowania Dokumentacji technicznej:** **o) Miejscowość i data**
HU (Eredeti használati utasítás fordítása) **EK-megfelelőségi nyilatkozata** **(2006/42/EK gépirányelv, II. melléklet "A" rész)** **1. Alulírott Vállalat** **2. Felelősségének teljes tudatában kijelenti, hogy az alábbi gép: Vezetőüléses fűnyírógép/ fűnyírás** **a) Típus / Alaptípus** **c) Gyártási szám** **d) Motor: robbanómotor** **3. Megfelel az alábbi irányelvek előírásainak:** **e) Tanúsító szerv** **4. Hivatkozás a harmonizált szabványokra** **g) Mért zajteljesítmény szint** **h) Garantált zajteljesítmény szint** **i) Vágási szélesség** **n) Műszaki Dosszié szerkesztésére felhatalmazott személy:** **o) Helye és ideje**	**RU** (Перевод оригинальных инструкций) **Декларация соответствия нормам ЕС** **(Директива о машинном оборудовании 2006/42/ЕС, Приложение II, часть А)** **1. Предприятие** **2. Заявляет под собственную ответственность, что машина: Ездовая косилка с водителем / стрижка газона** **а) Тип / Базовая модель** **с) Паспорт** **d) Двигатель: двигатель внутреннего сгорания** **3. Соответствует требованиям следующих директив:** **е) Сертифицирующий орган** **4. Ссылки на гармонизированные нормы** **g) Измеренный уровень звуковой мощности** **h) Гарантируемый уровень звуковой мощности** **i) Амплитуда кошения** **n) Лицо, уполномоченное на подготовку технической документации:** **o) Место и дата**	**HR** (Prijevod originalnih uputa) **EK Izjava o sukladnosti** **(Direktiva 2006/42/EZ o strojevima, dodatak II, dio A)** **1. Tvrtka:** **2. pod vlastitom odgovornošću izjavljuje da je stroj: Sjedeća kosilica trave s operaterom/ košenje trave** **a) Vrsta / Osnovni model** **c) Matični broj** **d) Motor: motor s unutarnjim izgaranjem** **3. sukladan s temeljnim zahtjevima direktiva:** **e) Certifikacijsko tijelo** **4. Primijenjene su slijedeće harmonizirane norme:** **g) Izmjerena razina zvučne snage** **h) Zajamčena razina zvučne snage** **i) Širina rezanja** **n) Osoba ovlaštena za pravljenje Tehničke datoteke:** **o) Mjesto i datum**

SL (Prevod izvirnih navodil) **ES izjava o skladnosti** **(Direktiva 2006/42/ES) , priloga II, del A)** **1. Družba** **2. pod lastno odgovornostjo izjavlja, da je stroj: Traktorska kosilnica/ košnja trave** **a) Tip / osnovni model** **c) Serijska številka** **d) Motor: motor z notranjim izgorevanjem** **3. Skladen je z določili direktiv :** **e) Ustanova, ki izda potrdilo** **4. Sklicevanje na usklajene predpise** **g) Izmerjen nivo zvočne moči** **h) Zagotovljen nivo zvočne moči** **i) Obseg košnje** **n) Oseba, pooblaščena za sestavo tehnične knjižice:** **o) Kraj in datum**	**BS** (Prijevod originalnih uputa) **EZ izjava o sukladnosti** **(Direktiva o mašinama 2006/42/EZ, Prilog II, deo A)** **1. Firma** **2. Daje izjavu pod vlastitom odgovornošću da je mašina: Traktorska kosilica (traktorčić) / Košenje trave** **a) Tip / Osnovni model** **c) Serijski broj** **d) Motor: motor s unutrašnjim izgaranjem** **3. sukladna s osnovnim zahtjevima direktive:** **e) Certifikaciono tijelo** **4. Pozivanje na usklađene norme** **g) Izmjereni nivo zvučne snage** **h) Garantovani nivo zvučne snage** **i) Širina košenja** **n) Osoba ovlaštena za izradu tehničke brošure:** **o) Mjesto i datum**	**SK** (Preklad pôvodného návodu na použitie) **ES vyhlásenie o zhode** **(Smernica o Strojných zariadeniach 2006/42/ES, Príloha II, časť A)** **1. Spoločnosť** **2. Vyhlasuje na vlastnú zodpovednosť, že stroj: Kosačka so sediacou obsluhou/ kosačka na trávu** **a) Typ / Základný model** **c) Výrobné číslo** **d) Motor: spaľovací motor** **3. Je v zhode s nariadeniami smerníc:** **e) Certifikačný orgán** **4. Odkaz na Harmonizované normy** **g) Nameraná úroveň akustického výkonu** **h) Zaručená úroveň akustického výkonu** **i) Šírka kosenia** **j) Čistý inštalovaný výkon** **n) Osoba autorizovaná na vytvorenie Technického spisu:** **o) Miesto a Dátum**
RO (Traducerea manualului fabricantului) **CE -Declaratie de Conformitate** **(Directiva Maşini 2006/42/CE, Anexa II, partea A)** **1. Societatea** **2. Declară pe propria răspundere că maşina: Maşină de tuns iarba cu ș ofer la volan/ tăiat iarba** **a) Tip / Model de bază** **c) Număr de serie** **d) Motor: motor cu combustie** **3. Este în conformitate cu specificaţiile directivelor:** **e) Organism de certificare** **4. Referinţă la Standardele armonizate** **g) Nivel de putere sonoră măsurat** **h) Nivel de putere sonoră garantat** **i) Lăţimea de tăiere** **n) Persoană autorizată să întocmească Dosarul Tehnic** **o) Locul şi Data**	**LT** (Originalių instrukcijų vertimas) **EB atitikties deklaracija** **(Mašinų direktyva 2006/42/CE, Priedas II, dalis A)** **1. Bendrovė** **2. Prisiima atsakomybę, kad įrenginys: Balninė vejapjovė su sėdinčiu operatoriumi / žolės pjovimas** **a) Tipas / Bazinis Modelis** **c) Serijos numeris** **d) Variklis: vidaus degimo variklis** **3. Atitinka direktyvose pateiktas specifikacijas:** **e) Sertifikavimo įstaiga** **4. Nuoroda į suderintas Normas** **g) Išmatuotas garso galios lygis** **h) Užtikrinamas garso galios lygis** **i) Pjovimo plotis** **n) Autorizuotas asmuo sudaryti Techninę Dokumentaciją:** **o) Vieta ir Data**	**LV** (Instrukciju tulkojums no oriģinālvalodas) **EK atbilstības deklarācija** **(Direktīva 2006/42/EK par mašīnām, pielikums II, daļa A)** **1. Uzņēmums** **2. Uzņemoties par to pilnu atbildību, paziņo, ka mašīna: Sēžot vadāma zālienu pļaujmašīna/ zāles pļaušana** **a) Tips / Bāzes modelis** **c) Sērijas numurs** **d) Motors: iekšdedzes motors** **3. Atbilst šādu direktīvu prasībām:** **e) Sertifikācijas iestāde** **4. Atsauce uz harmonizētiem standartiem** **g) Izmērītais skaņas intensitātes līmenis** **h) Garantētais skaņas intensitātes līmenis** **i) Pļaušanas platums** **n) Pilnvarotais darbinieks, kas sagatavoja tehnisko dokumentāciju:** **o) Vieta un datums**
SR (Prevod originalnih uputstval) **EC deklaracija o usaglašenosti** **(Direktiva o mašinama 2006/42/EC, Prilog II, deo A)** **1. Preduzeće** **2. Daje izjavu pod vlastitom odgovornošću da je mašina: Traktorska kosačica (traktorčić)/ košenje trave** **a) Tip / Osnovni model** **c) Serijski broj** **d) Motor: motor s unutrašnjim sagorevanjem** **3. u skladu s osnovnim zahtevima direktiva:** **e) Sertifikaciono telo** **4. Pozivanje na usklađene norme** **g) Izmereni nivo zvučne snage** **h) Garantovani nivo zvučne snage** **i) Širina košenja.....** **n) Osoba ovlašćena za sastavljanje tehničke brošure** **o) Mesto i datum**	**BG** (Превод на оригиналните инструкции) **ЕО декларация за съответствие** **(Директива Машини 2006/42/ЕО, Приложение II, част А)** **1. Дружеството** **2. На собствена отговорност декларира, че машината: Косачка със седнал водач/ рязане на трева** **а) Вид / Базисен модел** **б) Месец / година на производство** **в) Сериен номер** **г) Мотор: мотор с вътрешно горене** **3. Е в съответствие със спецификата на директивите:** **д) Сертифициращ орган** **4. Базирано на хармонизираните норми** **ж) Ниво на измерена акустична мощност** **и) Гарантирано ниво на акустична мощност** **й) Широчина на косене** **р) Лице, упълномощено да състави Техническата Документация:** **о) Място и дата**	**ET** (Algupärase kasutusjuhendi tõlge) **EÜ vastavusdeklaratsioon** **(Masinadirektiiv 2006/42/EÜ, Lisa II, osa A)** **1. Firma** **2. Kinnitab omal vastutusel, et masin: Istuva juhiga muruniitja / muruniitja** **a) Tüüp / Põhimudel** **c) Matrikkel** **d) Mootor: Sisepõlemismootor** **3. Vastab direktiivide nõuetele:** **e) Kinnitav asutus** **4. Viide ühtlustatud standarditele** **g) Mõõdetud helivõimsuse tase** **h) Garanteeritud helivõimsuse tase** **i) Lõikelaius** **n) Tehnilise Lehe autoriseeritud koostaja:** **o) Koht ja Kuupäev**

© by ST. S.p.A.

IT • Il contenuto e le immagini del presente manuale d'uso sono stati realizzati per conto di ST. S.p.A. e sono tutelati da diritto d'autore – E' vietata ogni riproduzione o alterazione anche parziale non autorizzata del documento.
BG • Съдържанието и изображенията в настоящото ръководство са извършени за ST. S.p.A. и са защитени с авторски права – Забранява се всяко неоторизирано възпроизвеждане или промяна, дори и отчасти на документа.
BS • Sadržaj i slike iz ovog korisničkog priručnika napravljeni su isključivo za ST. S.p.A. i zaštićeni su autorskim pravima – zabranjena je svaka neovlaštena reprodukcija ili izmjena dokumenta, djelomično ili u potpunosti.
CS • Obsah a obrázky v tomto návodu k použití byly zpracovány jménem společnosti ST. S.p.A. a jsou chráněny autorským právem – Reprodukce či nepovolené pozměňování tohoto dokumentu, a to i částečné, je zakázáno.
DA • Indhold og illustrationer i denne vejledning er blevet skabt på vegne af ST. S.p.A. og er beskyttet af ophavsret – Enhver gengivelse eller ændring, også delvis, af dokumentet uden autorisation hertil er forbudt.
DE • Inhalt und Bilder dieser Bedienungsanleitung wurden im Namen von ST. S.p.A. erstellt und sind urheberrechtlich geschützt – Jede nicht genehmigte Vervielfältigung oder Veränderung, auch auszugsweise, dieses Dokuments ist verboten.
EL • Το περιεχόμενο και οι εικόνες στο παρόν εγχειρίδιο χρήσης δημιουργήθηκαν για λογαριασμό της εταιρείας ST. S.p.A. και προστατεύονται από πνευματικά δικαιώματα – Απαγορεύεται οποιαδήποτε αναπαραγωγή ή τροποποίηση, έστω και μερική, του εγγράφου χωρίς έγκριση.
EN • The content and images in this User Manual were produced expressly for ST. S.p.A. and are protected by copyright – any unauthorised reproduction or modification to the document, either partially or in full, is prohibited.
ES • El contenido y las imágenes del presente manual de uso han sido creados por ST. S.p.A. y están protegidos por los derechos de autor – Se prohíbe toda reproducción o modificación, incluso parcial, no autorizada del documento.
ET • Käesoleva kasutusjuhendi sisu ja kujutised on toodetud konkreetselt ettevõttele ST. S.p.A. ja neile rakendub autorikaitseseadus – dokumendi igasugune osaline või täielik ilma loata reprodutseerimine või muutmine on keelatud.
FI • Tämän käyttöoppaan sisältö ja kuvat on valmistettu ST. S.p.A. -yhtiön toimesta ja niitä suojaa tekijänoikeuslaki. – Asiakirjan kaikenlainen kopioiminen tai muuttaminen, osittainkin, on kielletty ilman erityistä lupaa.
FR • Le contenu et les images du présent manuel d'utilisation ont été réalisés pour le compte de ST. S.p.A. et sont protégés par un droit d'auteur - Toute reproduction ou modification non autorisée, même partielle, du document, est interdite.
HR • Sadržaj i slike u ovom priručniku za uporabu izrađeni su za tvrtku ST. S.p.A. te su obuhvaćeni autorskim pravima – Zabranjuje se neovlašteno umnožavanje ili prilagodba, djelomična ili u cijelosti, ovog dokumenta.
HU • Ennek a használati útmutatónak a tartalma és a benne szereplő képek kizárólag a ST. S.p.A. számára készültek és szerzői joggal védettek – tilos a dokumentum bármely részének vagy egészének engedély nélküli sokszorosítása és módosítása.
LT • Šio naudotojo vadovo turinys ir paveikslėliai skirti tik „ST. S.p.A." ir yra saugomi autorių teisėmis – dokumentą atgaminti ar modifikuoti, visiškai arba iš dalies, yra draudžiama.
LV • Šīs lietotāja rokasgrāmatas saturs un attēli ir veidoti tikai ST. S.p.A. un ir aizsargāti ar autortiesībām. Jebkāda dokumenta vai tā daļas prettiesiska kopēšana vai pārveide ir stingri aizliegta.
MK • Содржината и сликите во Упатството за корисникот се подготвени исклучиво за ST. S.p.A. и се заштитени со авторски права – забрането е секое делумно или целосно неовластено репродуцирање или измена на документот.
NL • De inhoud en de afbeeldingen van deze gebruikshandleiding werden gerealiseerd voor rekening van ST. S.p.A. en zijn beschermd door het auteursrecht – Elke niet-geautoriseerde reproductie of wijziging, ook gedeeltelijke, van het document is verboden.
NO • Innholdet og bildene i denne brukerveiledningen er utført på oppdrag fra ST. S.p.A. og er beskyttet ved opphavsrett - Enhver gjengivelse eller endring, selv kun delvis, er forbudt.
PL • Treść oraz ilustracje zawarte w niniejszej instrukcji obsługi powstały na zlecenie spółki ST. S.p.A. i są chronione prawami autorskimi – Zabrania się wszelkiego kopiowania bądź modyfikowania, także częściowego, niniejszego dokumentu bez uzyskania stosownej zgody.
PT • As imagens e os conteúdos contidos no presente Manual do Utilizador foram expressamente criados para uso exclusivo da ST. S.p.A., encontrando-se protegidos por direitos de autor. Qualquer tipo de reprodução ou alteração, parcial ou integral, não autorizadas deste Manual estão expressamente proibidas.
RO • Conținutul și imaginile din manualul de utilizare de față au fost realizate în numele ST. S.p.A. și sunt protejate de drepturi de autor – Este interzisă orice reproducere sau modificare chiar și parțială neautorizată a documentului.
RU • Тесты и изображения, содержащиеся в настоящем руководстве, были созданы в интересах ST. S.p.A. и защищены авторскими правами – Любое несанкционированное воспроизведение или изменение документа запрещено.
SK • Obsah a obrázky v tomto návode na používanie boli spracované menom spoločnosti ST. S.p.A. a sú chránené autorským právom – Reprodukcie či nepovolené pozmeňovanie tohto dokumentu, a to aj čiastočné, je zakázané.
SL • Vsebine in slike v tem uporabniškem priročniku so izdelane za podjetje ST. S.p.A. in so zaščitene z avtorskimi pravicami – vsakršno nepooblaščeno razmnoževanje ali spreminjanje dokumenta, v celoti ali delno, je prepovedano.
SR • Sadržaj i slike ovog priručnika za upotrebu su napravljeni u ime ST. S.p.A. i zaštićeni su autorskim pravima – Zabranjena je svaka potpuna ili delimična reprodukcija ili izmena dokumenta bez odobrenja.
SV • Innehållet och bilderna i denna användarhandbok har framställts för ST. S.p.A. och skyddas av upphovsrätt – all form av reproduktion eller ändring, även partiell, som inte auktoriserats är förbjuden.
TR • Bu Kullanıcı Kılavuzundaki içerik ve resimler açıkça ST. S.p.A. için üretilmiştir ve telif hakkı ile korunmaktadır – dokümanın izinsiz olarak tamamen ya da kısmen herhangi bir şekilde çoğaltılması ya da değiştirilmesi yasaktır.

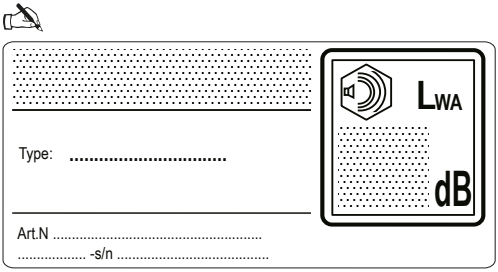

ST. S.p.A.
Via del Lavoro, 6
31033 Castelfranco Veneto (TV) ITALY

STIGA LTD (UK Importer)
Unit 8, Bluewater Estate Plympton,
Devon, PL7 4JH, England